SEWERAGE AND WATER BOARD OF NEW ORLEANS

CONTRACT No. 3669

HURRICANE KATRINA RELATED
404 HAZARD MITIGATION GRANT PROGRAM

REPLACEMENT OF
SEWAGE LIFT STATION NO. 6

DRAWING INDEX

SHEET No.	DRAWING No.	Discipline	TITLE	SHEET No.	DRAWING No.	Discipline	TITLE
1	12037–W–63	GENERAL	TITLE SHEET	27A	12037–W–63	STRUCTURAL	WET WELL AND PUMP STATION
2	12037–W–63	GENERAL	LOCATION MAP/GENERAL NOTES				MISCELLANEOUS DETAILS
3	12037–W–63	CIVIL	SITE PLAN – EXISTING CONDITIONS AND DEMOLITION	28	12037–W–63	MECHANICAL	MECHANICAL EQUIPMENT LAYOUT PLAN
4	12037–W–63	CIVIL	SITE PLAN – REQUIRED STATION AND PIPING	29	12037–W–63	MECHANICAL	PIPING CROSS SECTION THROUGH
4A	12037–W–63	CIVIL	TRAFFIC CONTROL				STATION AND WET WELL
4B	12037–W–63	CIVIL	LANDSCAPE PLAN AND TREE PROTECTION DETAILS	30	12037–W–63	MECHANICAL	LONGITUDINAL SECTION
5	12037–W–63	CIVIL	SITE PAVING AND FENCING PLANS	31	12037–W–63	MECHANICAL	PIPING CROSS SECTION THROUGH
5A	12037–W–63	CIVIL	WOOD FENCING DETAILS				STATION AND MISCELLANEOUS DETAILS
5B	12037–W–63	CIVIL	METAL PICKET FENCING DETAILS	32	12037–W–63	MECHANICAL	WET WELL PLAN, SECTION AND DETAILS
6	12037–W–63	CIVIL	MISCELLANEOUS SITEWORK DETAILS	33	12037–W–63	––	REFERENCE DRAWING
7	12037–W–63	CIVIL	SEWER NOTES	34	12037–W–63	––	REFERENCE DRAWING
8	12037–W–63	ARCHITECTURAL	FLOOR FRAMING AND ROOF PLANS	35	12037–W–63	––	REFERENCE DRAWING
9	12037–W–63	ARCHITECTURAL	BUILDING ELEVATIONS	36	12037–W–63	––	REFERENCE DRAWING
10	12037–W–63	ARCHITECTURAL	BUILDING SECTIONS	37	12037–W–63	––	REFERENCE DRAWING
11	12037–W–63	ARCHITECTURAL	ARCHITECTURAL DETAILS	38	12037–W–63	––	REFERENCE DRAWING
12	12037–W–63	ARCHITECTURAL	ARCHITECTURAL DETAILS	39	12037–W–63	––	REFERENCE DRAWING
13	12037–W–63	STRUCTURAL	BORING LOGS	40	12037–W–63	––	REFERENCE DRAWING
14	12037–W–63	STRUCTURAL	STRUCTURAL NOTES	41	12037–W–63	––	REFERENCE DRAWING
15	12037–W–63	STRUCTURAL	PUMP PIT FOUNDATION PLAN AND SECTIONS	42	5031–P1	ELECTRICAL	ELECTRICAL – REQUIRED SITE PLAN
16	12037–W–63	STRUCTURAL	OPERATING FLOOR FRAMING AND GRATING PLAN	43	5031–P2	ELECTRICAL	ELEMENTARY, PNEUMATIC, CONTROL AND
17	12037–W–63	STRUCTURAL	CEILING LEVEL FRAMING AND ROOF PLAN				ONE LINE DIAGRAMS
18	12037–W–63	STRUCTURAL	FRAMING SECTION AND DETAILS – 1	44	5031–P3	ELECTRICAL	ELECTRICAL FLOOR PLAN, EXTERIOR WALL
19	12037–W–63	STRUCTURAL	FRAMING SECTION AND DETAILS – 2				ELEVATIONS AND DETAILS
20	12037–W–63	STRUCTURAL	PLATFORM AND STAIR FRAMING PLAN	45	5031–P4	ELECTRICAL	ELECTRICAL INTERIOR WALL ELEVATIONS
21	12037–W–63	STRUCTURAL	STAIR SECTION AND DETAILS				AND DETAILS
22	12037–W–63	STRUCTURAL	LADDER DETAILS	46	5031–P5	ELECTRICAL	AUTOMATION CONTROL PANEL
23	12037–W–63	STRUCTURAL	ROOF SECTION AND DETAILS				FABRICATION AND WIRING
24	12037–W–63	STRUCTURAL	PPC PILE AND MISCELLANEOUS DETAILS	47	5031–P6	ELECTRICAL	SCADA PANEL RISER DIAGRAM
25	12037–W–63	STRUCTURAL	WET WELL FOUNDATION PLAN AND DETAILS				AND DETAILS
26	12037–W–63	STRUCTURAL	WET WELL ELEVATION SECTION	48	5031–P7	ELECTRICAL	LIGHTNING PROTECTION PLAN AND DETAILS
26A	12037–W–63	STRUCTURAL	WET WELL DETAILS				
27	12037–W–63	STRUCTURAL	WET WELL AND PUMP STATION TRS				
			PLAN AND DETAILS				

S.L.S. No. 6

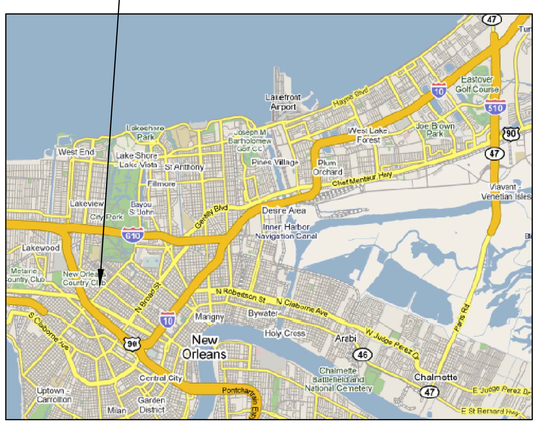

VICINITY MAP

AREA MAP NO SCALE

REV.	DATE	DESCRIPTION	BY

SEWERAGE AND WATER BOARD OF NEW ORLEANS

CONTRACT 3669
HURRICANE KATRINA RELATED
404 HAZARD MITIGATION GRANT PROGRAM
REPLACEMENT OF SEWAGE LIFT STATION NO. 6

TITLE SHEET

DESIGN ENGINEERING INC.
3330 West Esplanade Ave. S.
Suite 205
Metairie, LA 70002
(504) 836–2155

DR. TH/BD
TRC. ––
CK. DS/CW
AP. JH
SCALE: NONE
DATE: JANUARY 2012

GENERAL SUPERINTENDENT

DWG. No. 12040–W–63

SET NO.

SHEET NO. 1

PRINTED Aug 08, 2013 – 1:44pm FILENAME – J:\6005.1–GOSHEP–2013\Contract 3669 – SPS No. 6\SHT 1_NO 6_Title_Sheet.dwg

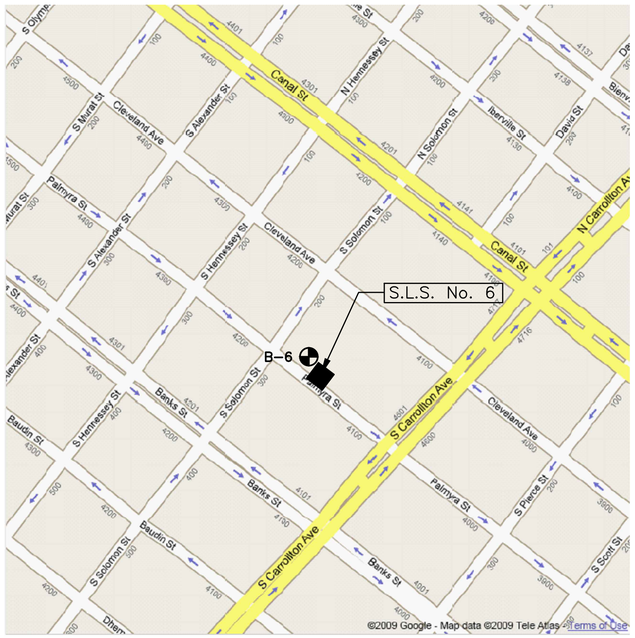

242 SOUTH SOLOMON STREET
LOCATION MAP – S.L.S. No. 6

AREA MAP NO SCALE

NOTE:
S.L.S. = SEWAGE LIFT STATION

GENERAL NOTES:

1. THE CONTRACTOR SHALL VISIT THE SITE AND FAMILIARIZE HIMSELF WITH EXISTING SITE CONDITIONS IN ORDER TO OBTAIN A FULL UNDERSTANDING OF WORK TO BE DONE.

2. PRIOR TO ANY DEMOLITION, CLEARING AND OR EXCAVATION (IF NEEDED), THE CONTRACTOR SHALL LOCATE ALL UNDERGROUND UTILITIES BY CALLING LOUISIANA ONE CALL AT 1–800–272–3020.

3. CONTRACTOR SHALL BE RESPONSIBLE FOR ANY AND ALL DAMAGES CAUSED TO EXISTING STRUCTURES AND UTILITIES DURING CONSTRUCTION AT NO ADDITIONAL COST TO THE SWBNO.

4. CONTRACTOR SHALL CONTACT PROJECT MANAGER'S OFFICE IMMEDIATELY CONCERNING ANY CONFLICTS THAT ARISE DURING THE COURSE OF CONSTRUCTION ACTIVITIES.

5. THE EXISTING PUMPING STATION SHALL REMAIN IN SERVICE AS LONG AS POSSIBLE DURING CONSTRUCTION OF THE NEW STATION. WHEN THE EXISTING STATION IS NO LONGER OPERABLE, THE CONTRACTOR SHALL PROVIDE TEMPORARY BY–PASS PUMPING IN ACCORDANCE WITH SECTION 13 OF THE SPECIFICATIONS.

6. THE CONTRACTOR SHALL NOTIFY THE SWBNO AND THE PROGRAM MANAGER IF THEY PLAN TO WORK ON A SWBNO HOLIDAY OR A WEEKEND DAY. THE SWBNO HAS THE FINAL AUTHORIZATION ON WORK PERFORMED THAT IS NOT ON REGULAR WORK DAYS.

7. THE CONTRACTOR SHALL BE RESPONSIBLE FOR DETERMINING THE EXACT LOCATION, DEPTH, AND SIZE OF ALL UNDERGROUND UTILITIES AND STRUCTURES AND SHALL BE LIABLE FOR ANY DAMAGE CAUSED BY FAILURE TO COMPLY WITH THESE INSTRUCTIONS. PRIOR TO COMMENCING CONSTRUCTION, THE CONTRACTOR SHALL PERFORM EXPLORATORY EXCAVATIONS (POT–HOLING) TO DETERMINE THE LOCATION OF EXISTING UTILITIES AFFECTED BY THIS CONSTRUCTION AND SHALL REPORT HIS FINDINGS TO THE BOARD ENGINEER. THE CONTRACTOR SHALL INCLUDE IN HIS BID, EXPLORATORY EXCAVATIONS FOR A MINIMUM OF FIVE (5) LOCATIONS, HAVING A DEPTH RANGING FROM FIVE FEET TO TWELVE FEET.

8. ALL WORK SHALL CONFORM TO THE CITY OF NEW ORLEANS DEPARTMENT OF PUBLIC WORKS (CNO–DPW), THE SEWERAGE AND WATER BOARD OF NEW ORLEANS (SWBNO), LOUISIANA DEPARTMENT OF PUBLIC HOSPITALS (DHH) AND OCCUPATIONAL SAFETY AND HEALTH ADMINISTRATION (OSHA) STANDARDS.

9. THE CONTRACTOR IS RESPONSIBLE FOR REMOVAL OF DIRT AND DEBRIS FROM STREETS AND ROADWAYS AND PROJECT SITE GENERATED BY CONSTRUCTION ACTIVITIES.

10. THE CONTRACTOR IS RESPONSIBLE FOR REPAIRING ALL DAMAGE TO ADJACENT PAVEMENT AND FENCING WHICH RESULTS FROM THE CONTRACTOR'S CONSTRUCTION ACTIVITIES AT NO ADDITIONAL. COST TO THE SWBNO.

11. CONTRACTOR SHALL CLEAN AND PAINT ALL EXPOSED SURFACES OF MECHANICAL EQUIPMENT, PIPING, PIPE SUPPORTS, AND OTHER ELEMENTS IN ACCORDANCE WITH SECTION 11 OF THE SPECIFICATIONS.

12. BUILDING SIZES AND MECHANICAL EQUIPMENT LAYOUTS INDICATED ON THESE DRAWINGS ARE BASED ON GORMAN–RUPP PUMPS AND GENERAL ELECTRIC MOTORS. CONTRACTOR SHALL VERIFY PUMP STATION DIMENSIONS WITH EQUIPMENT MANUFACTURER'S SHOP DRAWINGS TO ENSURE PROPER FIT WITHIN THE STRUCTURE.

13. CONTRACTOR SHALL PROTECT ADJACENT PROPERTY AND IMPROVEMENTS FROM DAMAGE AND REPLACE ANY PORTIONS DAMAGED THROUGH HIS OPERATION AT HIS OWN EXPENSE. ALL REPAIR WORK SHALL BE TO THE SATISFACTION OF THE SWBNO.

14. CONTRACTOR SHALL RE–GRADE ALL AREAS ALTERED BY CONSTRUCTION ACTIVITIES TO PROVIDE POSITIVE DRAINAGE. ALL WORK SHALL BE IN A MANNER ACCEPTABLE TO THE SWBNO.

15. CONTRACTOR SHALL PROVIDE A MINIMUM OF 48 HOURS ADVANCE NOTICE TO THOSE AFFECTED BY CONSTRUCTION ACTIVITIES THAT MAY DISRUPT WATER, SEWER, OR OTHER UTILITY SERVICES. UTILITY SERVICES SHALL BE PROMPTLY REPAIRED AND SHALL NOT REMAIN OUT OF SERVICE OVERNIGHT.

16. CONTRACTOR SHALL AT ALL TIMES CONDUCT HIS OPERATION TO ENSURE MINIMAL INCONVENIENCE TO THE GENERAL PUBLIC, ADJACENT PROPERTY OWNERS, AND BUSINESSES. CONTRACTOR SHALL PROVIDE AND MAINTAIN ACCESS TO ALL PROPERTIES AND TRAFFIC FLOW IN ROADWAYS AT ALL TIMES.

17. ALL GRASS AREAS ALTERED SHALL BE SEEDED, FERTILIZED, WATERED, AND MAINTAINED BY THE CONTRACTOR UNTIL FINAL ACCEPTANCE OF THE PROJECT. CONTRACTOR SHALL WATER DAILY FROM SEEDING UNTIL 2 WEEKS AFTER GERMINATION.

18. THE CONTRACTOR SHALL CONTACT THE FOLLOWING ENTITIES AT LEAST FIVE (5) WORKING DAYS PRIOR TO BEGINNING CONSTRUCTION ACTIVITIES:

    SEWERAGE AND WATER BOARD OF NEW ORLEANS

    BKI: DENNIS GARRARD 504–486–5901

    LOUISIANA ONE CALL – 1–800–272–3020

19. ALL MISCELLANEOUS METAL WORK, INCLUDING PIPE SUPPORTS AND BRACKETS TO BE INSTALLED WITHIN THE WET WELL SHALL BE MANUFACTURED ENTIRELY OF TYPE 316 STAINLESS STEEL. LIKEWISE, ALL FASTENERS, INCLUDING ANCHOR BOLTS INSTALLED WITHIN THE WET WELL SHALL BE MANUFACTURED OF STAINLESS STEEL. THREADS OF ALL STAINLESS STEEL FASTENERS SHALL BE TREATED WITH AN ANTI–SEIZE COMPOUND FORMULATED FOR USE WITH STAINLESS STEEL, SUCH AS "PURE NICKEL SPECIAL ANTI SEIZE COMPOUND", MANUFACTURED BY "NEVER–SEEZ", OR EQUAL.

20. COMPLETED INSTALLATION SHALL COMPLY WITH ALL APPLICABLE LAWS, LOCAL CODES, AND THE LATEST EDITION OF THE NATIONAL ELECTRICAL CODE.

21. ALL ELECTRICAL EQUIPMENT SHALL BE FURNISHED AND INSTALLED OR RELOCATED FROM EXISTING FACILITIES, IN ACCORDANCE WITH SECTION 15 OF THE SPECIFICATIONS.

22. NAMEPLATES CONTAINING PERTINENT DATA SHALL BE INSTALLED ON ALL THE EQUIPMENT THAT IS INSTALLED BY THE CONTRACTOR.

23. TESTING SHALL BE PERFORMED BY QUALIFIED TESTING AGENCIES AND FIELD SERVICE COMPANIES AS NECESSARY TO AUGMENT THE CONTRACTOR'S OWN CAPABILITIES. TESTING AND REPORTING METHODS SHALL COMPLY WITH APPLICABLE CITY OF NEW ORLEANS STANDARDS. ALL TEST RESULTS SHALL BE PUBLISHED ON THE CONTRACTOR'S OR TESTING COMPANY'S LETTERHEAD OR TEST FORMS BEARING THE LEGAL NAME AND ADDRESS OF THE COMPANY.

24. THE NEW STRUCTURES SHOWN ARE TO BE TIED INTO EXISTING PIPING. THE CONTRACTOR SHALL FIELD VERIFY ALL EXISTING CONDITIONS SHOWN ON THE DRAWINGS THAT RELATE TO NEW WORK. THE CONTRACTOR SHALL NOTIFY THE ENGINEER OF ANY DISCREPANCIES PRIOR TO FABRICATION OR CONSTRUCTION.

25. CITY OF NEW ORLEANS DEPARTMENT OF PUBLIC WORKS (CNO–DPW) STANDARD DRAWINGS ARE AVAILABLE FROM THE CNO–DPW ENGINEERING DIVISION, CITY HALL, 1300 PERDIDO STREET, ROOM 6W03, NEW ORLEANS, LOUISIANA 70012, OR ONLINE AT www.nola.gov.

REV.	DATE	DESCRIPTION	BY

SEWERAGE AND WATER BOARD OF NEW ORLEANS

CONTRACT 3669
HURRICANE KATRINA RELATED
404 HAZARD MITIGATION GRANT PROGRAM
REPLACEMENT OF SEWAGE LIFT STATION NO. 6

LOCATION MAP/GENERAL NOTES

DESIGN ENGINEERING INC.
3330 West Esplanade Ave. S.
Suite 205
Metairie, LA 70002
(504) 836–2155

DR. TH/BD
TRC. ––
CK. DS/CW
AP. JH
SCALE: NONE
DATE: JANUARY 2012

GENERAL SUPERINTENDENT

DWG. No. 12040–W–63

SET NO. SHEET NO. 2

PRINTED Aug 08, 2013 – 1:44pm FILENAME – J:\6005.1–GOSHEP–2013\Contract 3669 – SPS No. 6\SHT 2_NO 6_LOC MAP.dwg

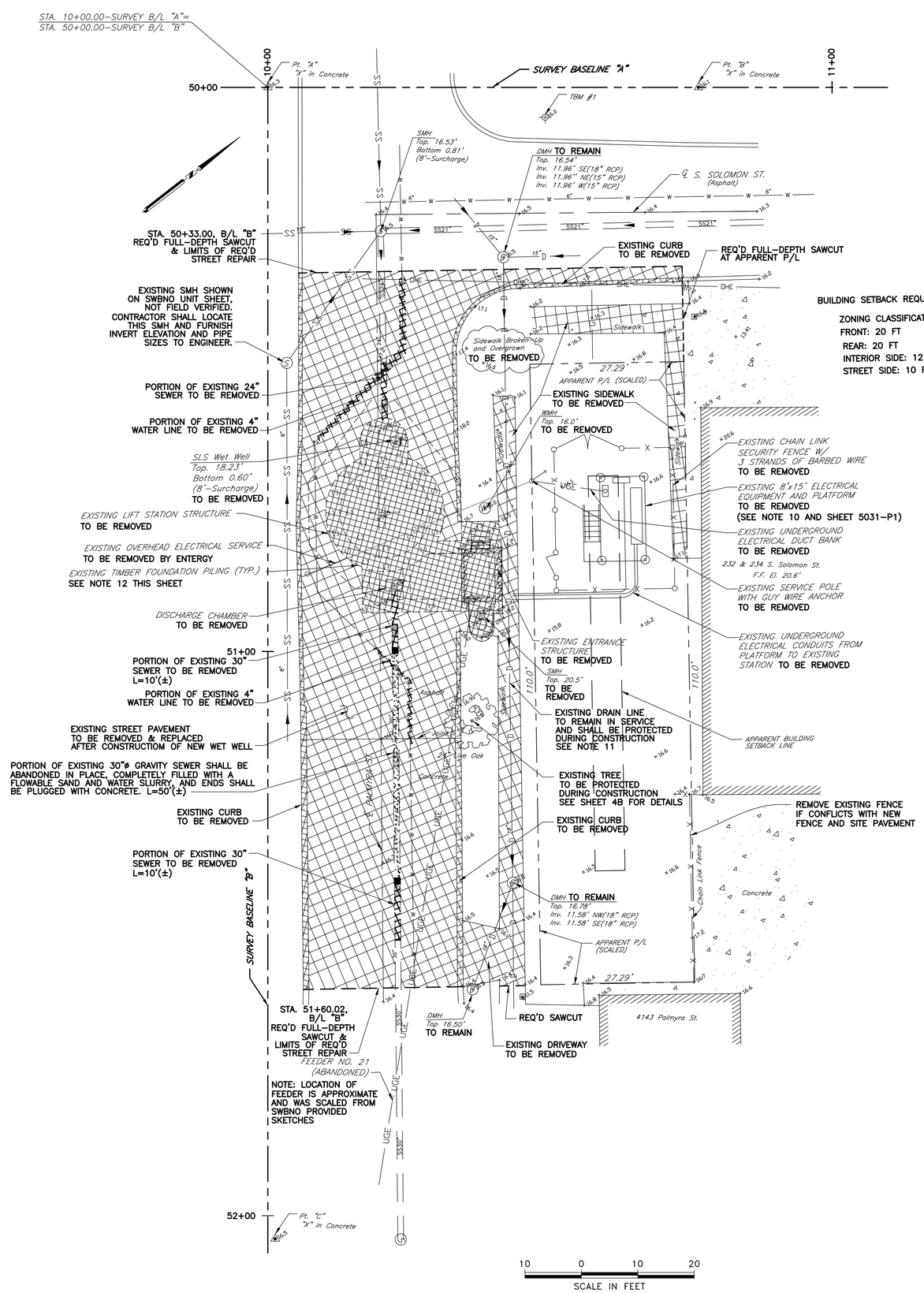

LEGEND

- Light Pole
- Power Pole
- Guy Anchor
- Drain Manhole
- Sanitary Sewer Manhole
- Station Tower
- Survey Baseline Point
- Sign
- Water Meter
- Fire Hydrant
- Bollard
- Elevation Shot
- 36" Grate (Elect.)
- Existing Water Line
- Existing Storm Drain Line
- Existing Gas Line
- Existing Fence
- Overhead Power Line
- Sanitary Sewer Line
- Underground Electric
- REMOVAL OF STRUCTURES AND OBSTRUCTIONS
- REMOVE EXISTING ROADWAY, CURBS, DRIVEWAYS OR SIDEWALKS

BUILDING SETBACK REQUIREMENTS

ZONING CLASSIFICATION: RD–3
FRONT: 20 FT
REAR: 20 FT
INTERIOR SIDE: 12 FT
STREET SIDE: 10 FT

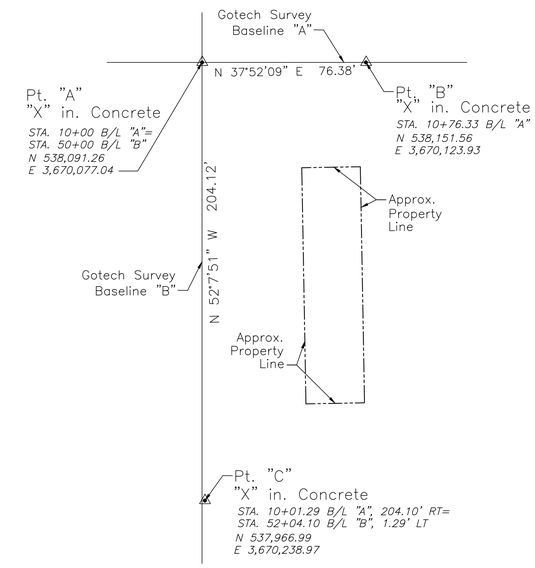

Survey Baseline Location Detail

N.T.S.

REFERENCES:

GOTECH FIELD BOOK 274.

NOTES:

1. DISTANCES AND COORDINATE VALUES SHOWN ARE IN FEET BY HORIZONTAL MEASUREMENT.
2. HORIZONTAL COORDINATES SHOWN ARE LOUISIANA LAMBERT SOUTH ZONE GRID SYSTEM COORDINATES BASED ON NATIONAL GEODETIC SURVEY'S ONLINE POSITIONING USER SERVICE (OPUS) PROCESSING OF GPS OBSERVATION DATA COLLECTED ON 8/18/2009 & PROCESSED ON 8/21/2009.
3. VERTICAL DATUM IS CAIRO DATUM ADJUSTED FROM NAVD88 DATUM OBTAINED FROM OPUS PROCESSING OF GPS OBSERVATION DATA COLLECTED ON 8/18/2009 AND PROCESSED ON 8/21/2009.
4. TBM #1 – FLANGE BOLT ON FIRE HYDRANT, ELEV. = 19.05' CAIRO DATUM. CONTRACTOR SHALL VERIFY ELEVATION BEFORE USING. TOPOGRAPHIC SURVEY SITE LOCATED IN FLOOD ZONE B BASED ON THE FLOOD INSURANCE RATE MAPS FOR THE CITY OF NEW ORLEANS & ORLEANS PARISH, LA. – COMMUNITY PANEL NO. 225203–0115E, REVISED 3/1/84.
5. SEWER MANHOLES WERE SURCHARGED AND THE SURVEY CREW WAS UNABLE TO OBTAIN ANY INVERT ELEVATIONS OR SIZES OF PIPES ENTERING OR EXITING THE STRUCTURE. THE PIPE SIZES SHOWN WERE TAKEN FROM INFORMATION FURNISHED BY SWBNO.
6. HIGH WATER MARK ELEV. 23.0' CAIRO DATUM, LOCATED ON RESIDENCE AT 232 SOLOMON STREET.
7. GAS LINE SHOWN IS BASED ON PAINTED MARKS LOCATED ALONG SIDEWALK. NO ATTEMPT WAS MADE AS PART OF THE SURVEY TO LOCATE UNDERGROUND UTILITIES.
8. BASE FLOOD ELEVATION (B.F.E.) = ELEV. 20.13 CAIRO DATUM. BFE TAKEN FROM ELEVATION CERTIFICATE PREPARED BY DUFRENE SURVEY AND ENGINEERING, INC., DATED JANUARY, 2010.
9. 500 YEAR FLOOD ELEVATION = ELEV. 21.93 CAIRO DATUM. 500 YEAR FLOOD ELEVATION TAKEN FROM FEMA FLOOD INSURANCE STUDY, DATED SEPTEMBER 1, 1983.
10. SEE SHEETS 41–43 FOR PLATFORM AND PLATFORM FOUNDATION DRAWINGS. THESE DRAWINGS ARE FOR INFORMATIONAL PURPOSES ONLY.
11. CONTRACTOR WILL BE ALLOWED TO TEMPORARILY REPLACE EXISTING DRAIN LINE WITH 18" WELDED STEEL PIPE SPANNING THE WIDTH (32 FT) OF THE REQUIRED TEMPORARY RETAINING STRUCTURE (TRS). THE WELDED STEEL PIPE SHALL HAVE A MINIMUM THICKNESS OF 0.375".
12. AFTER REMOVAL OF EXISTING LIFT STATION STRUCTURE AND FOUNDATION SLAB, THE CONTRACTOR SHALL LOCATE THE EXISTING TIMBER FOUNDATION PILINGS AND SHALL REPORT HIS FINDINGS TO THE BOARD ENGINEER. THE CONTRACTOR SHALL ALSO REPORT TO THE BOARD ENGINEER, ANY CONFLICTS THE EXISTING PILINGS MAY HAVE WITH THE NEW WORK.

CIVIL

REV.	DATE	DESCRIPTION	BY

SEWERAGE AND WATER BOARD
OF NEW ORLEANS

CONTRACT 3669
HURRICANE KATRINA RELATED
404 HAZARD MITIGATION GRANT PROGRAM
REPLACEMENT OF SEWAGE LIFT STATION NO. 6

SITE PLAN – EXISTING CONDITIONS
AND DEMOLITION

DESIGN ENGINEERING INC.
3330 West Esplanade Ave. S.
Suite 205
Metairie, LA 70002
(504) 836–2155

DR. TH/BD
TRC. ––––
CK. DS/CW
AP. JH
SCALE: AS NOTED
DATE: JANUARY 2012

GENERAL SUPERINTENDENT

DWG. No. 12040–W–63

SET NO. | SHEET NO. 3

PRINTED Aug 08, 2013 – 1:45pm FILENAME – J:\6005.1–GOSHEP–2013\Contract 3669 – SPS No. 6\SHT 3_NO. 6_EXSITE.dwg

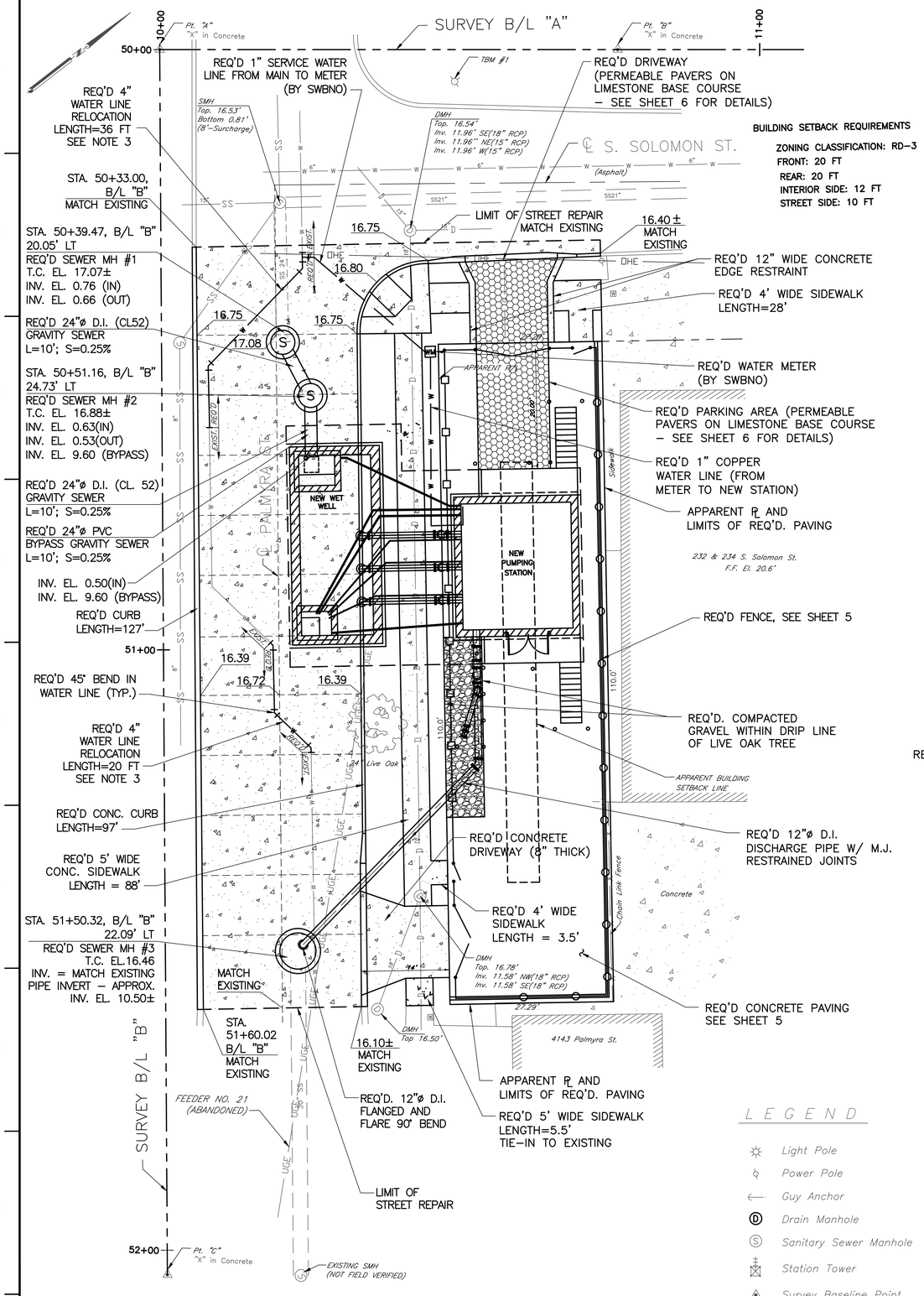

BUILDING SETBACK REQUIREMENTS

ZONING CLASSIFICATION: RD–3
FRONT: 20 FT
REAR: 20 FT
INTERIOR SIDE: 12 FT
STREET SIDE: 10 FT

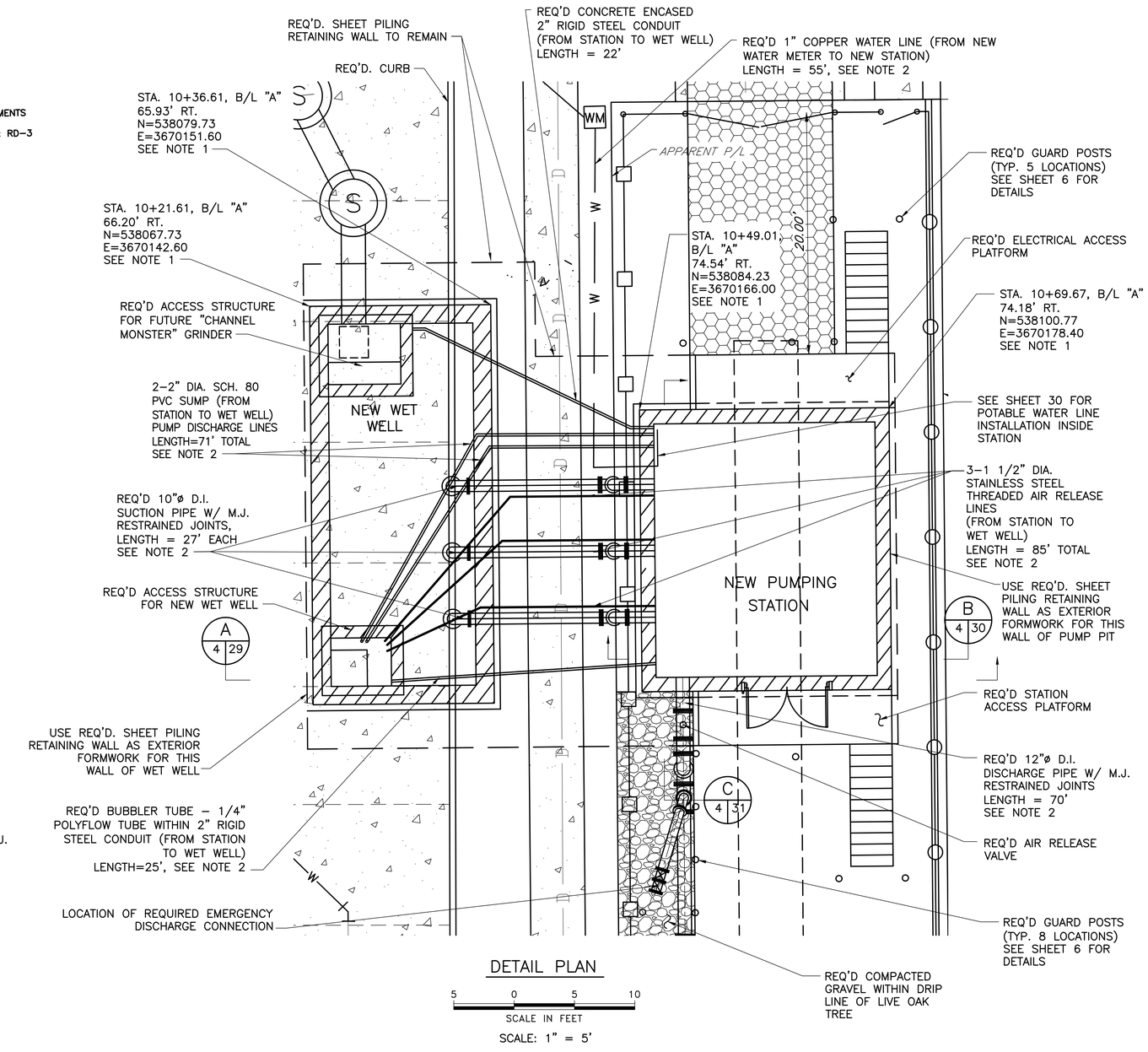

DETAIL PLAN

NOTE:
REQUIRED SEWER MANHOLES #1 AND #2 SHALL BE CONSTRUCTED IN ACCORDANCE WITH SWBNO DWG. NO. 6178–B–6 FOR BRICK MANHOLES OR SWBNO DWG. NO. 6178–B–6A FOR PRECAST SEWER MANHOLES. REQUIRED SEWER MANHOLE #3 SHALL BE CONSTRUCTED AS A STANDARD BRICK MANHOLE AS DETAILED ON SWBNO DWG. NO. D–870 AND SHALL INCLUDE SEALING OF MANHOLE WALLS IN ACCORDANCE WITH SWBNO DWG. NO. 6178–B–6.

L E G E N D

- Light Pole
- Power Pole
- Guy Anchor
- Drain Manhole
- Sanitary Sewer Manhole
- Station Tower
- Survey Baseline Point
- Sign
- Water Meter
- Fire Hydrant
- Bollard
- Elevation Shot
- 36" Grate (Elect.)
- Existing Fence
- Overhead Power Line
- Sanitary Sewer Line
- Underground Electric
- Storm Drain Line
- Gas Line
- Existing Water Line
- Required Wood Fence
- Required Metal Picket Fence
- Required Water Line
- Required Concrete Paving
- Required Concrete Paving Joint
- Required Grade

NOTES:

1. STATIONING AND COORDINATES GIVEN TO EXTERIOR CORNERS OF CONCRETE PUMP PIT WALLS. SEE SHEET 3 FOR SURVEY LINE DETAILS FOR BASIS OF STATIONING AND COORDINATES.
2. PIPE LENGTH SHOWN ONLY INCLUDES YARD PIPING, AND DOES NOT INCLUDED PIPING INSIDE STATION.
3. CONTRACTOR SHALL VERIFY LOCATION OF EXISTING WATER LINE PRIOR TO EXCAVATING FOR INSTALLATION OF REQUIRED WATER LINE.
4. REQUIRED STREET GRADES ARE TO GUTTER LINE.
5. STREET REPAIRS SHALL BE DONE IN ACCORDANCE WITH PROJECT SPECIFICATIONS AND DEPARTMENT OF PUBLIC WORKS OF NEW ORLEANS STANDARD DRAWINGS. (SEE SHEET 2, NOTE 25)

CIVIL

REV.	DATE	DESCRIPTION	BY

SEWERAGE AND WATER BOARD OF NEW ORLEANS

CONTRACT 3669
HURRICANE KATRINA RELATED
404 HAZARD MITIGATION GRANT PROGRAM
REPLACEMENT OF SEWAGE LIFT STATION NO. 6

SITE PLAN–REQUIRED STATION AND PIPING

DESIGN ENGINEERING INC.
3330 West Esplanade Ave. S.
Suite 205
Metairie, LA 70002
(504) 836–2155

DR. TH/BD
TRC. ––
CK. DS/CW
AP. JH
SCALE: AS NOTED
DATE: JANUARY 2012
GENERAL SUPERINTENDENT
DWG. No. 12040–W–63
SET NO.
SHEET NO. 4

PRINTED Aug 08, 2013 – 1:46pm FILENAME – J:\6005.1–GOSHEP–2013\Contract 3669 – SPS No. 6\SHT 4_NO 6_REQSITE.dwg

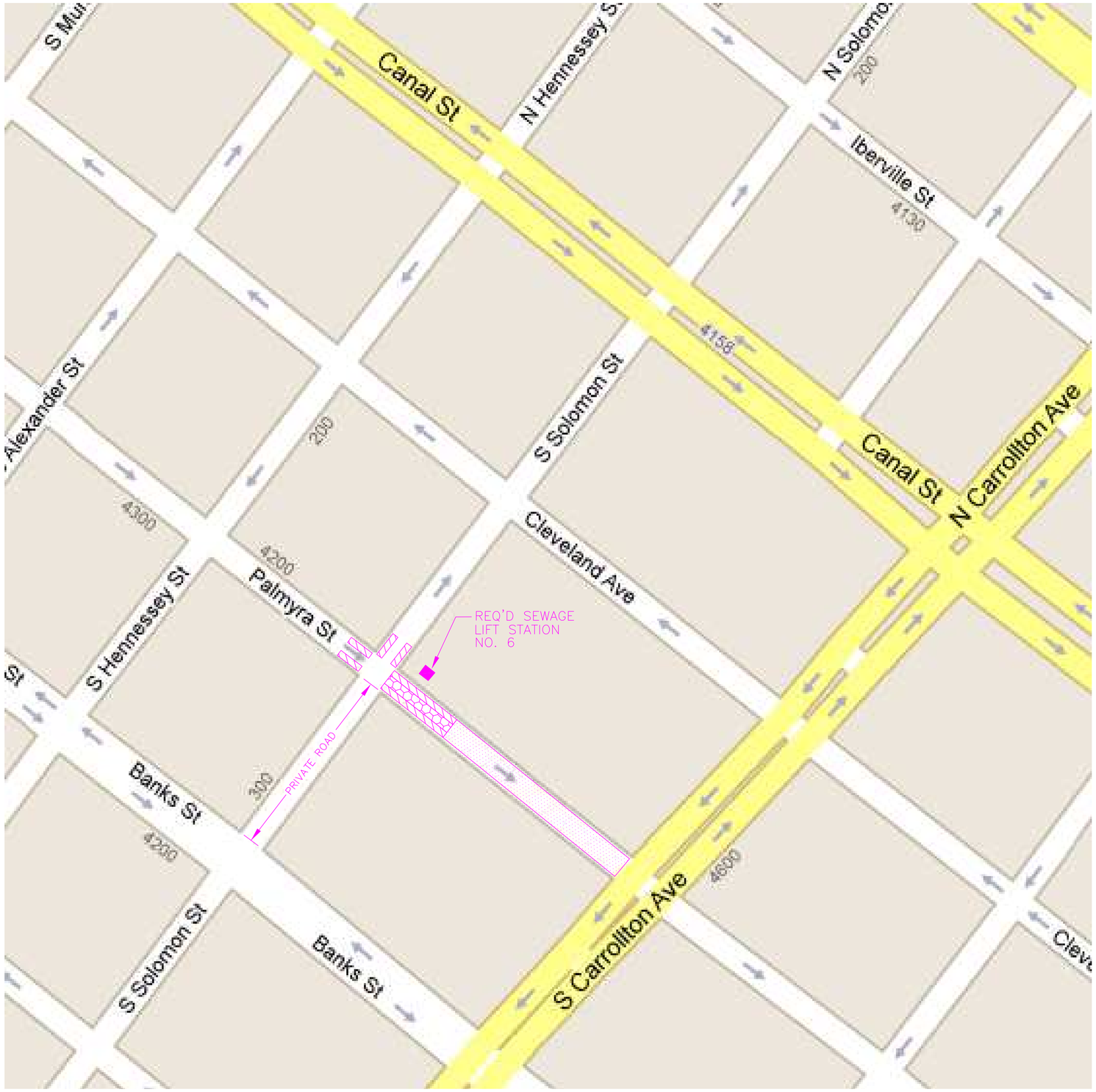

TRAFFIC CONTROL NOTES:

1. PARKING SHALL BE RESTRICTED DURING THE DURATION OF CONSTRUCTION AS INDICATED ON THIS SHEET AND AS FOLLOWS:
   - ALONG PALMYRA STREET: FROM 50 FT WEST OF THE CENTERLINE OF SOUTH SOLOMON STREET TO 150 FT EAST OF THE CENTERLINE OF SOUTH SOLOMON STREET.
   - ALONG SOUTH SOLOMON STREET: FROM PALMYRA STREET TO 50 FT NORTH OF THE CENTERLINE OF PALMYRA STREET.
2. THE CONTRACTOR SHALL MAINTAIN ONE LANE OF TRAFFIC ALONG PALMYRA STREET DURING CONSTRUCTION, EXCEPT DURING THE CONSTRUCTION OF REQUIRED SEWER MANHOLES, DEMOLITION OF EXISTING PUMPING STATION AND CONSTRUCTION OF TEMPORARY RETAINING STRUCTURE (TRS) WITHIN PALMYRA STREET.
3. DURING CLOSURE OF PALMYRA STREET INDICATED IN NOTE 2 ABOVE, TEMPORARY TWO-WAY TRAFFIC (FOR LOCAL ACCESS ONLY) WILL BE PERMITTED AS INDICATED ON THIS SHEET. THE CONTRACTOR SHALL PROVIDE SIGNAGE AND FLAGMEN IN ACCORDANCE WITH THE CITY OF NEW ORLEANS DEPARTMENT OF PUBLIC WORKS (CNO-DPW) STANDARD DRAWINGS (SEE SHEET 2, NOTE 25) AND THE MANUAL OF UNIFORM TRAFFIC CONTROL DEVICES (MUTCD).
4. ALL WORK SHALL BE SCHEDULED TO MINIMIZE THE CLOSURE OF PALMYRA STREET. THE CONTRACTOR SHALL SUBMIT A DETAILED SCHEDULE FOR REVIEW AND APPROVAL BY THE OWNER AND CNO-DPW. THE SCHEDULE SHALL INDICATE THE IMPACT OF PROPOSED CONSTRUCTION ON PALMYRA STREET. CLOSURE OF PALMYRA STREET SHALL NOT EXCEED 60 DAYS.
5. THE CONTRACTOR SHALL SUBMIT FOR REVIEW AND APPROVAL BY THE OWNER AND CNO-DPW A TRAFFIC CONTROL AND SIGNING PLAN INDICATING THE PROPOSED TRAVEL ROUTE FOR LARGE DELIVERY VEHICLES. TEMPORARY CLOSURE OF PALMYRA STREET AND SOUTH SOLOMON STREET WILL BE PERMITTED ON A LIMITED BASIS AS REQUIRED FOR DELIVERY BY LARGE VEHICLES. ONLY ONE OF THESE STREETS SHALL BE CLOSED AT A TIME. THE PLAN SHALL INDICATE THE ANTICIPATED EFFECT OF THE DELIVERIES TO PARKING ALONG THE LOCAL STREETS OF THE DELIVERY ROUTE. THE CONTRACTOR SHALL PROVIDE ADVANCE WARNING BY SIGNAGE AND FLAGMEN DURING SUCH TEMPORARY STREET CLOSURES IN ACCORDANCE WITH CNO-DPW STANDARD DRAWINGS AND MUTCD. THE PLAN SHALL ADDRESS WARNING METHODS THE CONTRACTOR PROPOSES TO EMPLOY.
6. THE CONTRACTOR SHALL NOTIFY THE OWNER AND CNO-DPW AT LEAST FIVE(5) WORKING DAYS IN ADVANCE OF ANY TEMPORARY STREET CLOSURES.
   - CNO-DPW CONTACT LOUIS HAYWOOD (504) 658-8040
7. PRIOR TO BEGINNING CONSTRUCTION, THE CONTRACTOR SHALL NOTIFY, IN WRITING, ALL PROPERTY OWNERS ALONG THE LOCAL STREETS OF THE DELIVERY ROUTE OF POSSIBLE STREET CLOSURES AND PARKING RESTRICTIONS.
8. SHOULD ADDITIONAL AREAS OF RESTRICTED PARKING BE REQUIRED, THE CONTRACTOR SHALL PROVIDE THE OWNER AND CNO-DPW WITH A PLAN FOR REVIEW AND APPROVAL INDICATING THE ADDITIONAL AREAS THAT WILL BE AFFECTED. THE CONTRACTOR SHALL FURNISH THE REQUIRED PLAN AT LEAST FOUR (4) WEEKS IN ADVANCE.

LEGEND:

CNO-DPW	DEPARTMENT OF PUBLIC WORKS OF NEW ORLEANS
MUTCD	MANUAL OF UNIFORM TRAFFIC CONTROL DEVICES
	RESTRICTED PARKING DURING ENTIRE DURATION OF CONSTRUCTION
	PERMITTED STREET CLOSURE DURING CONSTRUCTION OF BYPASS SEWER MANHOLES, DEMOLITION OF EXISTING PUMPING STATION AND CONSTRUCTION OF TRS WITHIN PALMYRA STREET
	TEMPORARY TWO WAY TRAFFIC DURING CLOSURE OF PALMYRA STREET (FOR LOCAL ACCESS ONLY)

REV.	DATE	DESCRIPTION	BY

SEWERAGE AND WATER BOARD OF NEW ORLEANS

CONTRACT 3669
HURRICANE KATRINA RELATED
404 HAZARD MITIGATION GRANT PROGRAM
REPLACEMENT OF SEWAGE LIFT STATION NO. 6

TRAFFIC CONTROL

DESIGN ENGINEERING INC.
3330 West Esplanade Ave. S.
Suite 205
Metairie, LA 70002
(504) 836-2155

DR. TH/BD
TRC. - -
CK. DS/CW
AP. JH
SCALE: NONE
DATE: JANUARY 2012

GENERAL SUPERINTENDENT

DWG. No. 12040-W-63

SET NO.

SHEET NO. 4A

PRINTED Aug 08, 2013 - 2:48pm FILENAME - J:\6005.1-GOSHEP-2013\Contract 3669 - SPS No. 6\SHT 4A_NO 6_TRAFFIC CONTROL.dwg

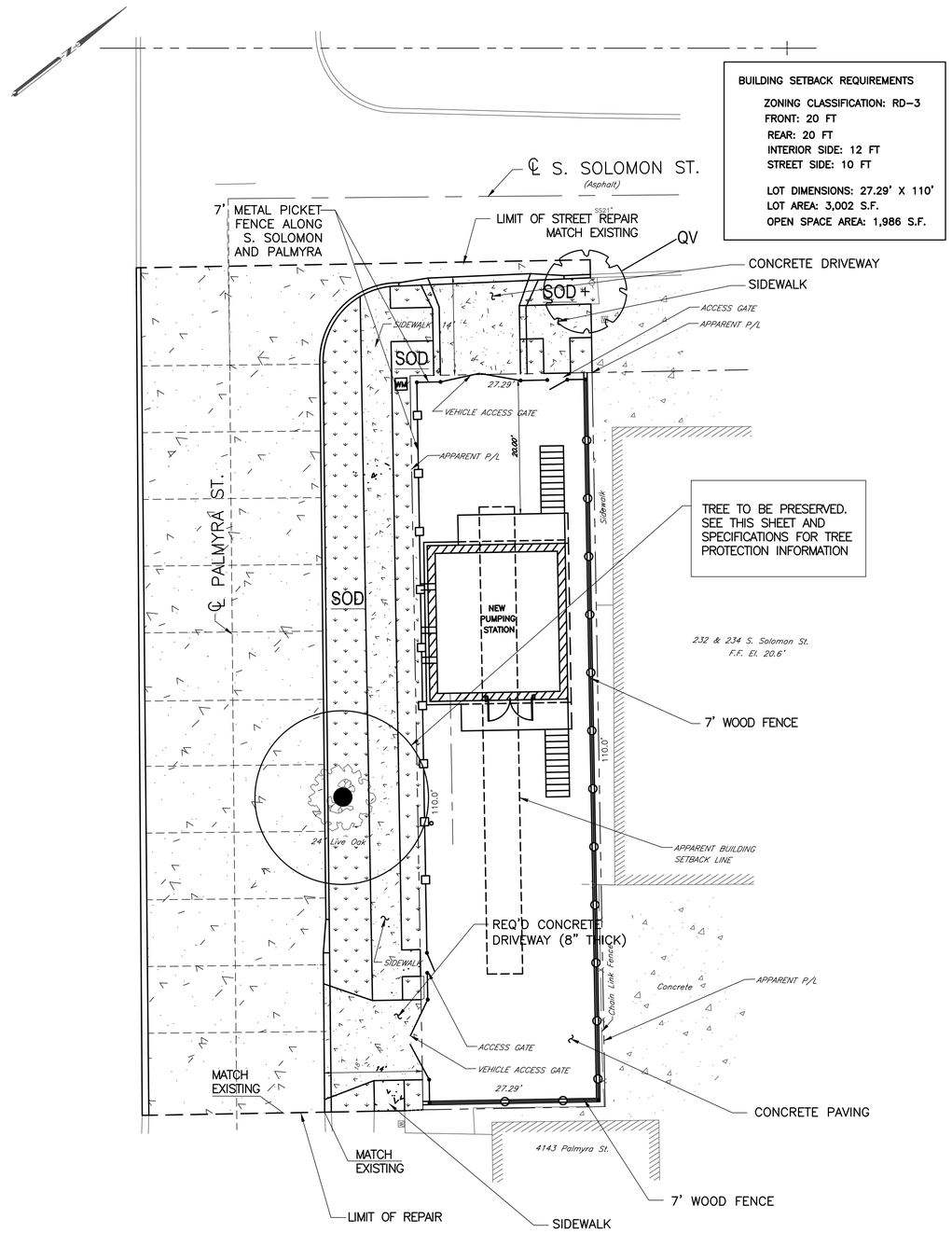

10 0 10 20
SCALE IN FEET

1 LANDSCAPE PLAN
1" = 10'-0"

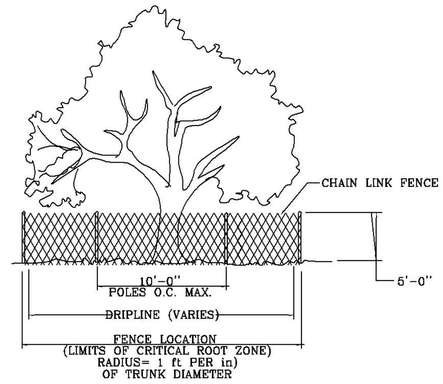

TREE PROTECTION FENCING
CHAIN LINK FENCE
N. T. S.

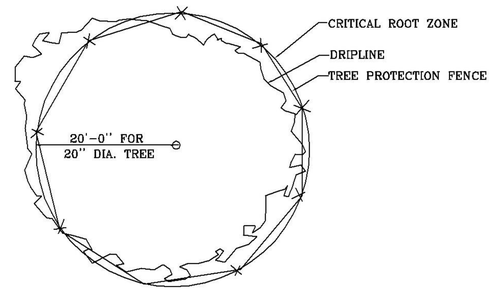

TREE PROTECTION FENCING
CHAIN LINK FENCE
N. T. S.

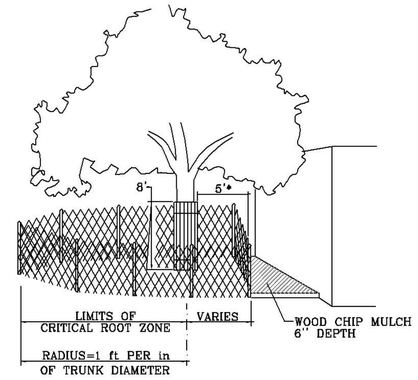

*AS NEEDED TO PROVIDE MINIMUM NECESSARY WORK SPACE. IF LESS THAN 5', THEN ADD BOARDS STRAPPED TO TRUNK.

MODIFIED TREE PROTECTION FENCING
CHAIN LINK FENCE
N. T. S.

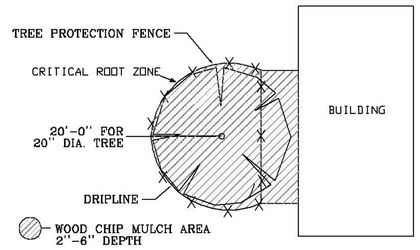

MODIFIED TREE PROTECTION FENCING
CHAIN LINK FENCE
N. T. S.

NOTES:

1. TREE PROTECTION DETAILS BASED ON STANDARD PLAN "TREE PROTECTION FOR STREET CONSTRUCTION", CITY OF NEW ORLEANS, DEPARTMENT OF PUBLIC WORKS
2. NOTICE IS TO BE POSTED ON FENCING – 15' O.C. – AND SHALL READ "<<<WARNING>>> PROTECTIVE TREE FENCING. DO NOT ENTER, MOVE OR REMOVE"

TREE PROTECTION DETAILS
N.T.S.

PLANT LIST

KEY	QTY.	BOTANICAL NAME	COMMON NAME	SIZE	NOTES
TREES					
QV	1	Quercus virginiana	Southern Live Oak	8'-10' Ht.	2 1/2"- 3"Cal.

LEGEND

EXISTING TREES TO REMAIN

REQ'D. LIVE OAK (QV)

FOR PLANT SCHEDULE, SEE THIS SHEET. FOR PLANTING NOTES AND DETAILS, SEE CNO-DPW STANDARD DRAWING STD 10.

CIVIL

REV.	DATE	DESCRIPTION	BY

SEWERAGE AND WATER BOARD OF NEW ORLEANS

CONTRACT 3669
HURRICANE KATRINA RELATED
404 HAZARD MITIGATION GRANT PROGRAM
REPLACEMENT OF SEWAGE LIFT STATION NO. 6

LANDSCAPE PLAN AND TREE PROTECTION DETAILS

DESIGN ENGINEERING INC.
3330 West Esplanade Ave. S.
Suite 205
Metairie, LA 70002
(504) 836-2155

DR. JW
TRC. — —
CK. DW
AP. DW
SCALE: AS NOTED
DATE: JANUARY 2012

GENERAL SUPERINTENDENT

DWG. No. 12040-W-63

SET NO.

SHEET NO. 4B

PRINTED Aug 08, 2013 – 1:49pm FILENAME – J:\6005.1-GOSHEP-2013\Contract 3669 – SPS No. 6\SHT 4B_NO 6_LANDSCAPING PLAN.dwg

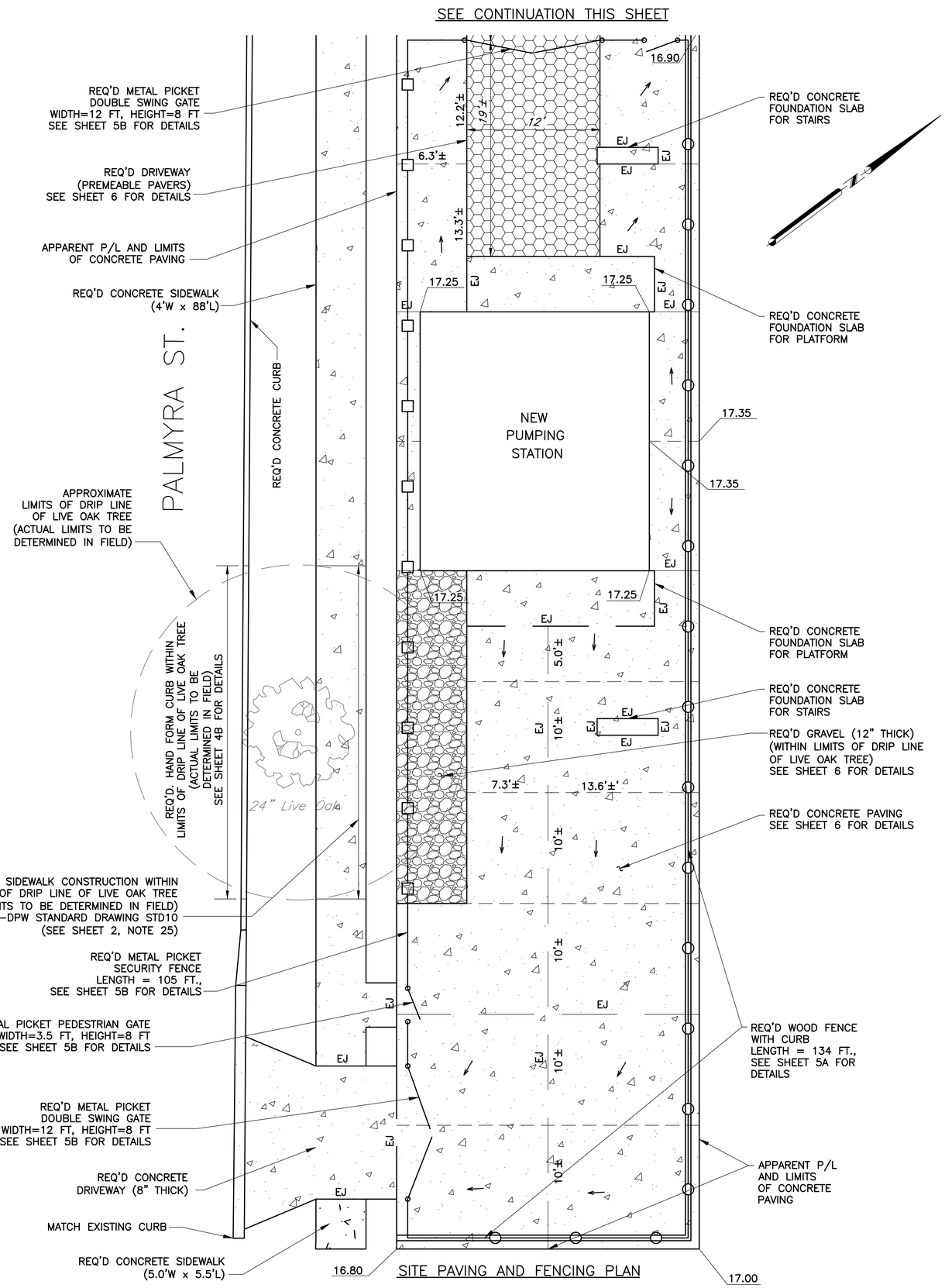

SITE PAVING AND FENCING PLAN

SCALE: 1" = 5'

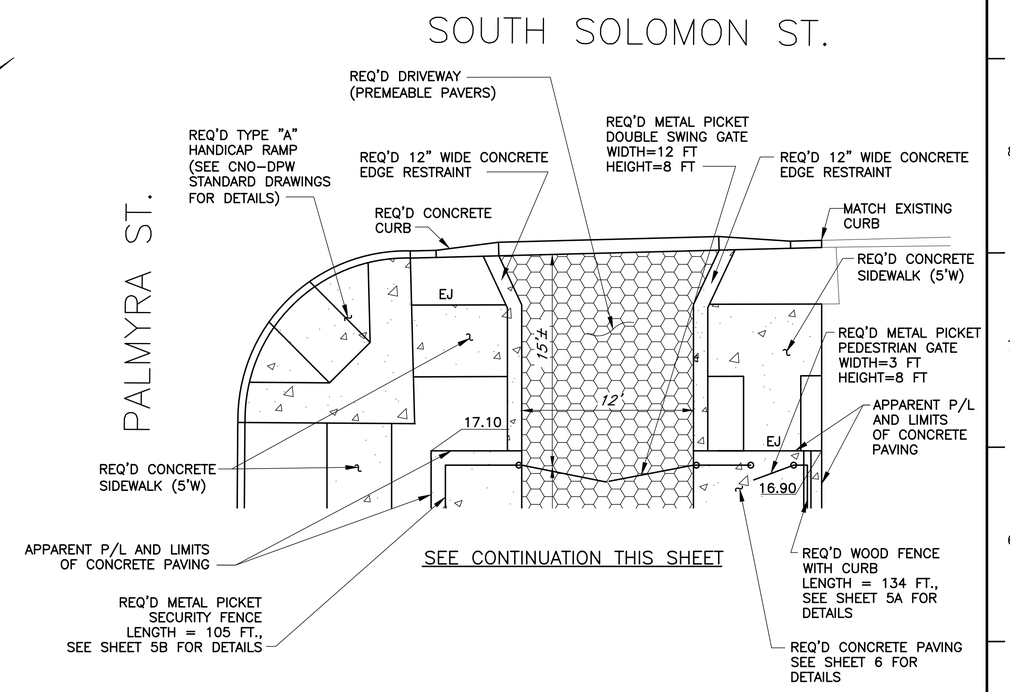

LEGEND:

CNO-DPW	CITY OF NEW ORLEANS DEPARTMENT OF PUBLIC WORKS
REQ'D WOOD FENCE	
REQ'D METAL PICKET FENCE	
REQ'D CONTROL JOINTS	
REQ'D EXPANSION JOINTS	

NOTES:

1. PAVING JOINTS SHALL BE IN ACCORDANCE WITH THE CITY OF NEW ORLEANS DEPARTMENT OF PUBLIC WORKS STANDARD DRAWINGS.
2. REQUIRED ELEVATIONS ARE TO THE TOP OF CONCRETE PAVEMENT.
3. LOCATIONS OF PAVING JOINTS AND ISOLATION SLABS ARE SHOWN FOR BIDDING PURPOSES ONLY. CONTRACTOR SHALL PROVIDE PAVING PLAN FOR APPROVAL PRIOR TO CONSTRUCTION.
4. SEE SHEETS 5A AND 5B FOR FENCING DETAILS.
5. ACTUAL LOCATION OF GATES SHALL BE DETERMINED IN THE FIELD.

CIVIL

REV.	DATE	DESCRIPTION	BY

SEWERAGE AND WATER BOARD OF NEW ORLEANS

CONTRACT 3669
HURRICANE KATRINA RELATED
404 HAZARD MITIGATION GRANT PROGRAM
REPLACEMENT OF SEWAGE LIFT STATION NO. 6

SITE PAVING AND FENCING PLANS

DESIGN ENGINEERING INC.
3330 West Esplanade Ave. S.
Suite 205
Metairie, LA 70002
(504) 836-2155

DR. TH/BD
TRC. – –
CK. DS/CW
AP. JH
SCALE: AS SHOWN
DATE: JANUARY 2012

GENERAL SUPERINTENDENT

DWG. No. 12040-W-63

SET NO.

SHEET NO. 5

PRINTED Aug 08, 2013 – 1:51pm FILENAME – J:\6005.1-GOSHEP-2013\Contract 3669 – SPS No. 6\SHT 5_NO 6_EXSITE-FENCE-DET.dwg

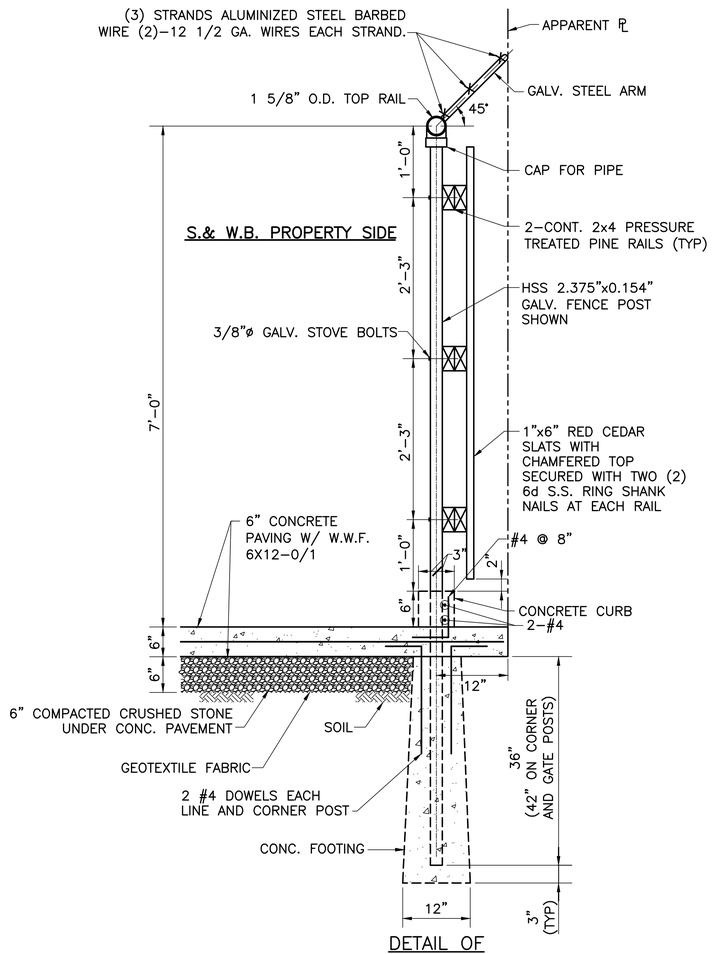

DETAIL OF
TYPICAL WOOD FENCE
SCALE: 1" = 1'–0"

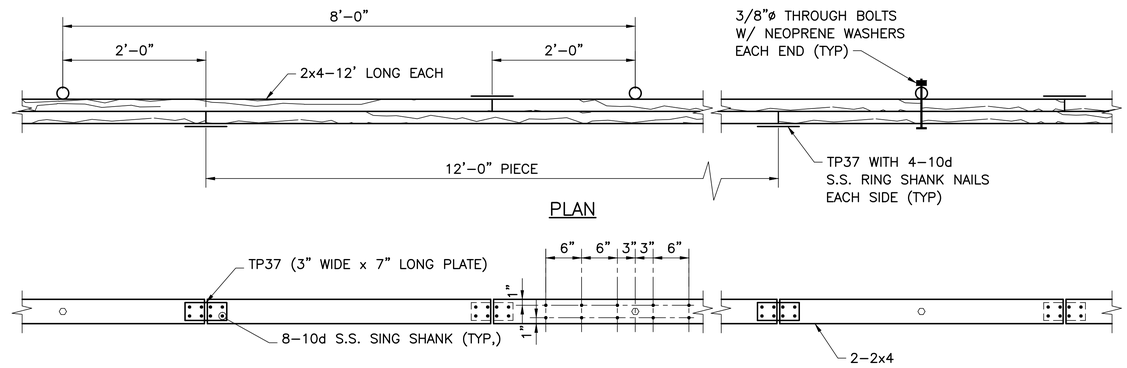

ELEVATION

TYPICAL RAIL SPLICE LOCATION
SCALE: 1" = 1'–0"

WOOD FENCE NOTES:

1. OVERALL HEIGHT OF FENCE: 8' (7' WOOD SLAT, 1' OF BARBED WIRE)
2. LINE POST: HSS GALV. PIPE, 2.375" O.D., 0.154" THICKNESS, SET NOT LESS THAN 36" IN CONC. AS SHOWN
3. CORNER POST: HSS GALV. PIPE, 2.875" O.D., 0.203" THICKNESS, SET NOT LESS THAN 42" IN CONC. AS SHOWN
4. GATE POST: HSS GALV. PIPE, 4.00" O.D., 0.226" THICKNESS, SET NOT LESS THAN 42" IN CONC. AS SHOWN
5. BARBED WIRE: (3) STRANDS OF ALUMINIZED STL. SET ON GALV. STL. ARMS. USE A 4 POINT PATTERN BARBED WIRE ON 3" CENTERS, (2) 12–1/2" GA WIRES PER STRAND. GALV. STEEL ARM SHALL NOT EXTEND BEYOND PROPERTY LINE (P/L).
6. TOP RAIL: 1–5/8" O.D. GALV. PIPE
7. BRACING (CORNER & GATE POSTS): 1–5/8" O.D. GALV. PIPE
8. DIAGONAL BRACE (GATE): HSS GALV. TUBE 4x2x0.233
9. GATES SHALL BE PROVIDED WITH 1/2"ø KEEPER BARS, FORMED LATCH AND PADLOCK EYE.
10. SLATS: RED CEDAR WITH A CHAMFERED TOP, TREATED WITH WATER REPELLENT PRESERVATIVE, WITH STAINLESS STEEL FASTENERS.
11. RAILS: TWO (2) 2–INCH x 4 INCH x 12–FOOT PRESSURE TREATED NO. 2 PRIME, OR BETTER, SOUTHERN PINE LUMBER
12. GATE FRAME: HSS GALVANIZED TUBE 2x2x0.233.

CIVIL

REV.	DATE	DESCRIPTION	BY

SEWERAGE AND WATER BOARD OF NEW ORLEANS

CONTRACT 3669
HURRICANE KATRINA RELATED
404 HAZARD MITIGATION GRANT PROGRAM
REPLACEMENT OF SEWAGE LIFT STATION NO. 6

WOOD FENCING DETAILS

DESIGN ENGINEERING INC.
3330 West Esplanade Ave. S.
Suite 205
Metairie, LA 70002
(504) 836–2155

DR. TH/BD
TRC. ––––
CK. DS/CW
AP. JH
SCALE: AS NOTED
DATE: JANUARY 2012

GENERAL SUPERINTENDENT

DWG. No. 12040–W–63

SET NO.
SHEET NO. 5A

PRINTED Aug 08, 2013 – 1:51pm FILENAME – J:\6005.1–GOSHEP–2013\Contract 3669 – SPS No. 6\SHT 5A_NO 6_WOOD–FENCE–DET.dwg

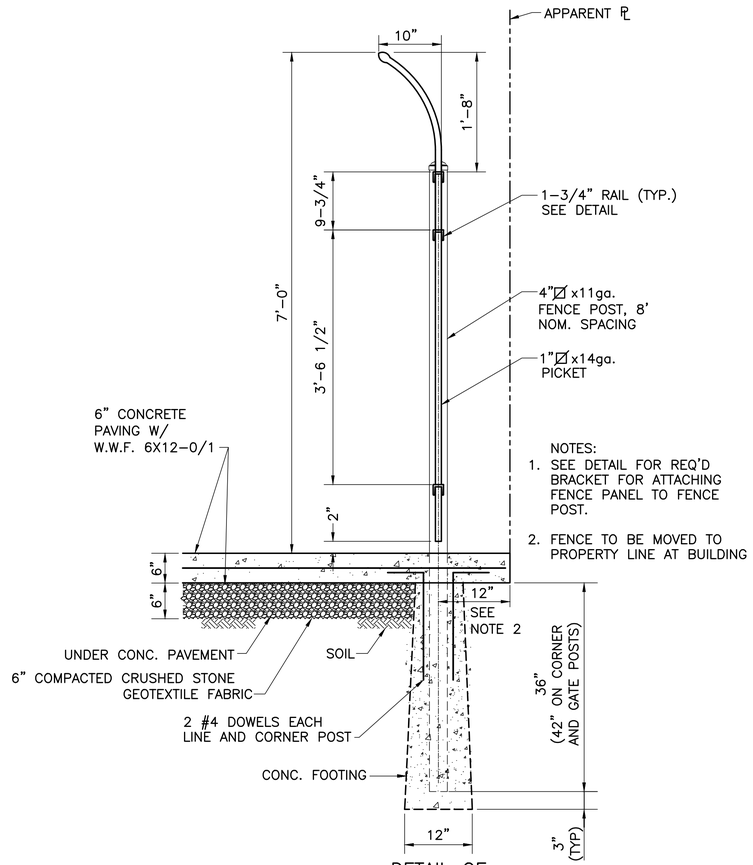

NOTES:
1. SEE DETAIL FOR REQ'D BRACKET FOR ATTACHING FENCE PANEL TO FENCE POST.
2. FENCE TO BE MOVED TO PROPERTY LINE AT BUILDING

DETAIL OF
TYPICAL METAL PICKET FENCE
SCALE: 1" = 1'-0"

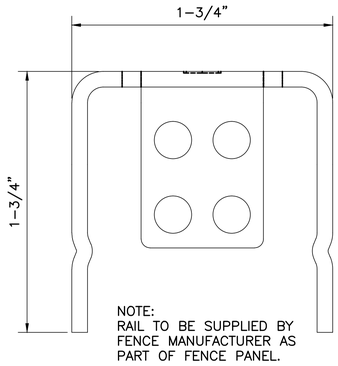

NOTE:
RAIL TO BE SUPPLIED BY FENCE MANUFACTURER AS PART OF FENCE PANEL.

DETAIL OF
RAIL FOR METAL PICKET FENCE
SCALE: N.T.S.

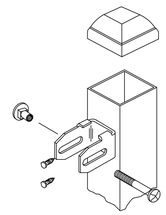

NOTE:
BRACKET TO BE SUPPLIED BY FENCE MANUFACTURER.

DETAIL OF
INDUSTRIAL FLAT MOUNT BRACKET
BB301
SCALE: N.T.S.

METAL PICKET FENCE NOTES:

1. HEIGHT OF FENCE: 7'
2. LINE POST: 3"x12Ga., SET NOT LESS THAN 36" IN CONC. AS SHOWN
3. CORNER POST: 3"x12Ga., SET NOT LESS THAN 42" IN CONC. AS SHOWN
4. PEDESTRIAN GATE POST: 3"x12Ga., SET NOT LESS THAN 42" IN CONC. AS SHOWN
5. DOUBLE GATE POST: 6"x3/16", SET LESS THAN 42" IN CONC. AS SHOWN
6: BRACKET TYPE: INDUSTRIAL FLAT MOUNT BB301
7. FENCE DETAILS BASED ON MONTAGE II INVINCIBLE, MANUFACTURED BY AMERISTAR FENCE PROJECTS, INC., OR ENGINEER APPROVED EQUAL.

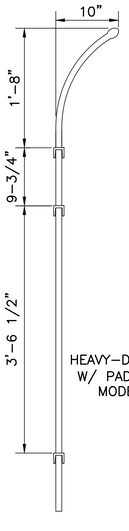

SECTION OF
GATE PICKET
SCALE: N.T.S.

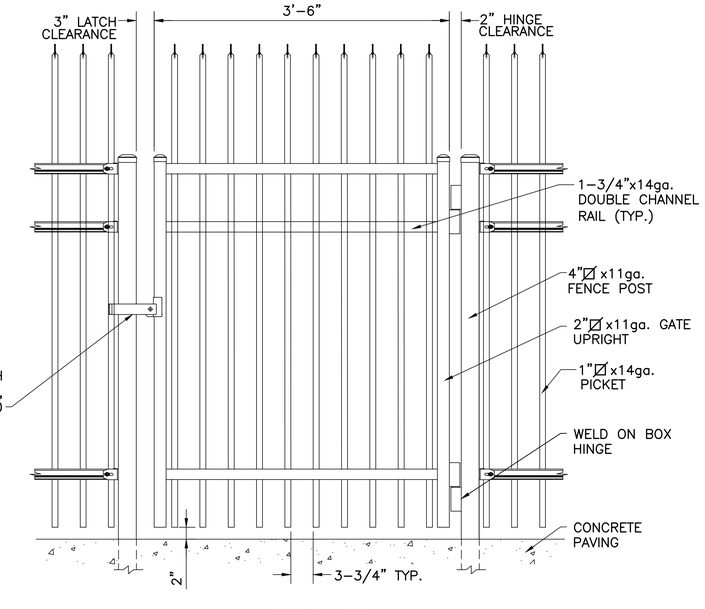

DETAIL OF
PEDESTRIAN GATE
SCALE: N.T.S.

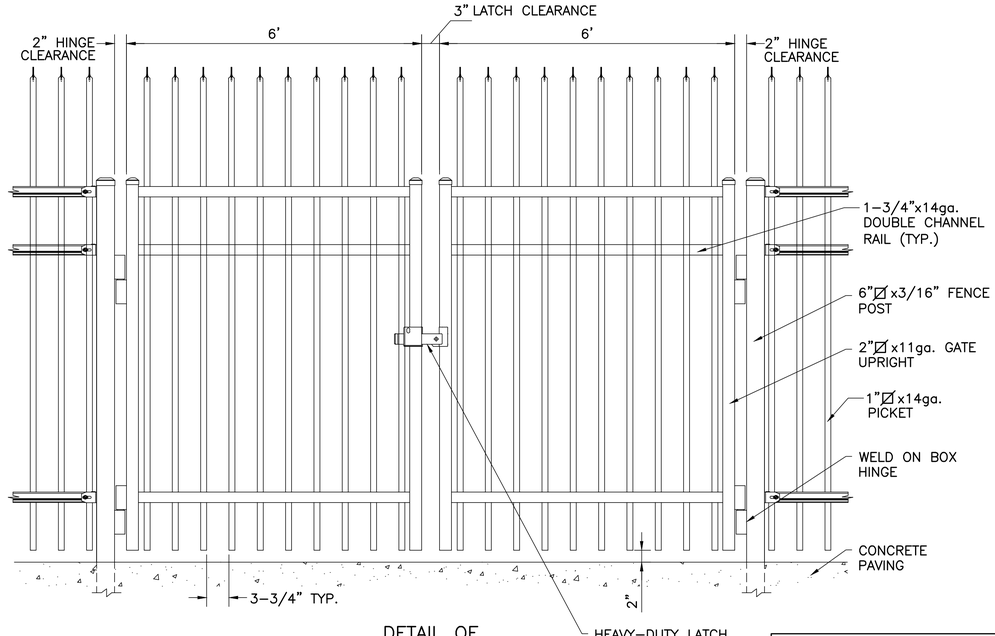

DETAIL OF
DOUBLE SWING GATE
SCALE: N.T.S.

CIVIL

REV.	DATE	DESCRIPTION	BY

SEWERAGE AND WATER BOARD
OF NEW ORLEANS

CONTRACT 3669
HURRICANE KATRINA RELATED
404 HAZARD MITIGATION GRANT PROGRAM
REPLACEMENT OF SEWAGE LIFT STATION NO. 6

METAL PICKET FENCING DETAILS

DESIGN ENGINEERING INC.
3330 West Esplanade Ave. S.
Suite 205
Metairie, LA 70002
(504) 836-2155

DR. TH/BD
TRC. ----
CK. DS/CW
AP. JH
SCALE: AS NOTED
DATE: JANUARY 2012

GENERAL SUPERINTENDENT

DWG. No. 12040-W-63

SET NO.
SHEET NO. 5B

PRINTED Aug 08, 2013 - 1:53pm FILENAME - J:\6005.1-GOSHEP-2013\Contract 3669 - SPS No. 6\SHT 5B_NO 6_METAL-FENCE-DET.dwg

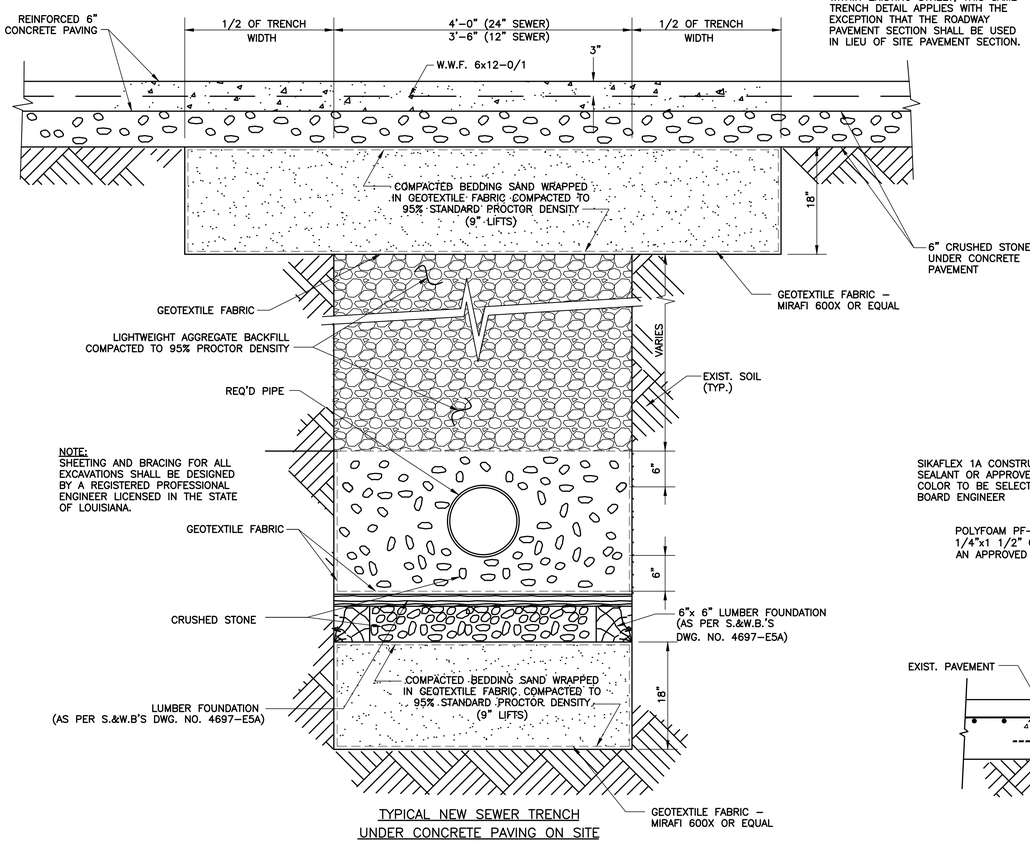

NOTE:
WHERE PIPE CONSTRUCTION FALLS WITHIN EXISTING STREET, THIS SAME TRENCH DETAIL APPLIES WITH THE EXCEPTION THAT THE ROADWAY PAVEMENT SECTION SHALL BE USED IN LIEU OF SITE PAVEMENT SECTION.

TYPICAL NEW SEWER TRENCH UNDER CONCRETE PAVING ON SITE

N.T.S.

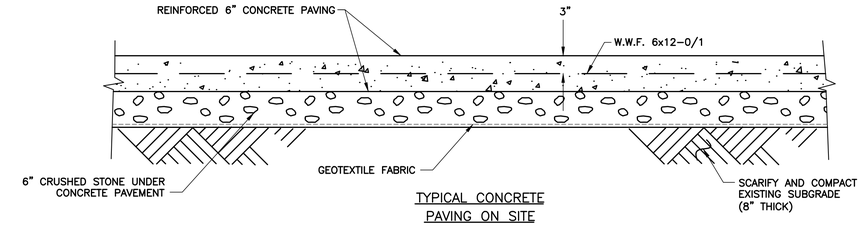

TYPICAL CONCRETE PAVING ON SITE

N.T.S.

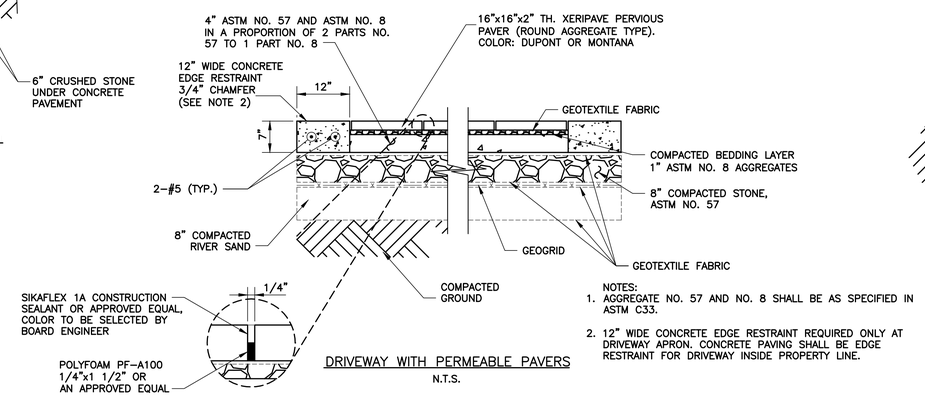

NOTES:
1. AGGREGATE NO. 57 AND NO. 8 SHALL BE AS SPECIFIED IN ASTM C33.
2. 12" WIDE CONCRETE EDGE RESTRAINT REQUIRED ONLY AT DRIVEWAY APRON. CONCRETE PAVING SHALL BE EDGE RESTRAINT FOR DRIVEWAY INSIDE PROPERTY LINE.

DRIVEWAY WITH PERMEABLE PAVERS

N.T.S.

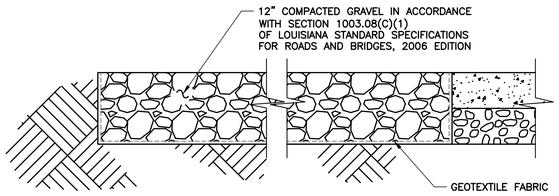

COMPACTED GRAVEL WITHIN DRIPLINE OF EXISTING LIVE OAK TREE

N.T.S.

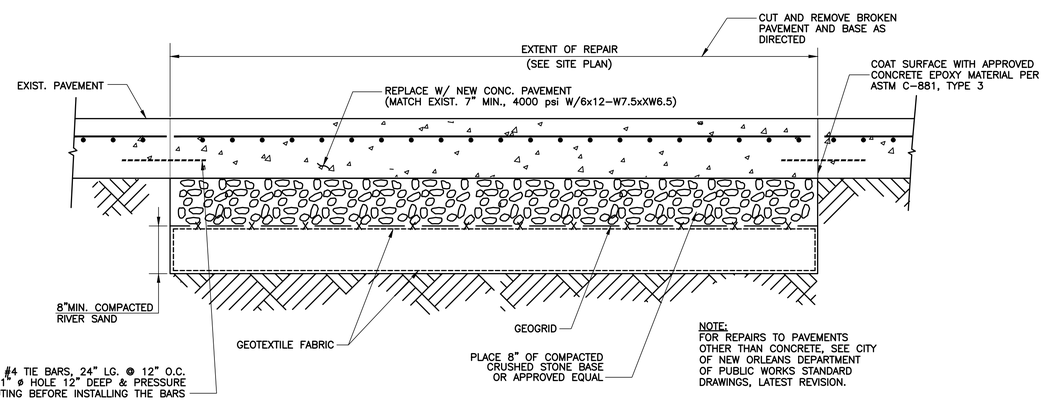

NOTE:
FOR REPAIRS TO PAVEMENTS OTHER THAN CONCRETE, SEE CITY OF NEW ORLEANS DEPARTMENT OF PUBLIC WORKS STANDARD DRAWINGS, LATEST REVISION.

PAVEMENT REPAIR IN STREET

N.T.S.

SITE PAVING NOTES

1. SEE SECTION 3 OF THE SPECIFICATIONS FOR MATERIAL REQUIREMENTS.

DRIVEWAY NOTES

1. FOR DRIVEWAY DETAILS, SEE CITY OF NEW ORLEANS DEPARTMENT OF PUBLIC WORKS STANDARD DRAWING STD8. (SEE SHEET 2, NOTE 25).

STREET REPAIR NOTES

1. SEE SECTION 3 OF THE SPECIFICATIONS FOR MATERIAL REQUIREMENTS.
2. ALL CONSTRUCTION REQUIRED IN STREET SHALL BE IN ACCORDANCE WITH THE DETAILS SHOWN ON THE DRAWINGS AND WITH THE LATEST EDITIONS OF THE CITY OF NEW ORLEANS DEPARTMENT OF STREETS GENERAL SPECIFICATIONS FOR STREET PAVING AND STANDARD PLANS STD1 THRU STD15.
3. THE AREA OF STREET REPAIRED INDICATED ON THE SITE PLAN SHALL BE SUBJECT TO APPROVAL BY THE CITY OF NEW ORLEANS DEPARTMENT OF PUBLIC WORKS.
4. ALL NEW STREET SURFACES SHALL MATCH EXISTING ROADWAY GRADES.
5. THICKNESS OF NEW CONCRETE PAVEMENT SHALL BE THE GREATER OF 7" MIN. OR THICKNESS OF EXIST. PAVEMENT.
6. THICKNESS OF NEW ASPHALT WEARING SURFACE SHALL BE THE GREATER OF 1 1/2" MIN. OR THICKNESS OF EXIST. SURFACE.
7. IF LIMITS OF REPAIR ARE WITHIN 3'-0" OF A JOINT, THEN REPLACE THE PAVEMENT TO THE NEAREST JOINT.

CONCRETE NOTES

1. NON-STRUCTURAL CONCRETE SHALL ATTAIN A STRENGTH OF 3000 PSI AT 28 DAYS.
2. ALL REINFORCING MESH SHALL CONFORM TO ASTM A-185.
3. CHAMFER ALL EXPOSED CONCRETE EDGES EXPOSED TO VIEW 3/4" UNLESS NOTED OTHERWISE.

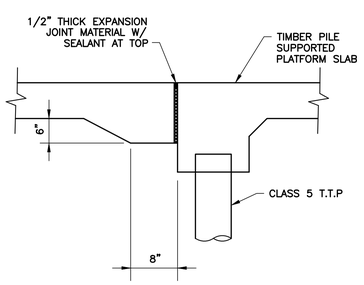

TYPICAL SECTION @ PAVING / PILE SUPPORTED PLATFORM SLAB

N.T.S.

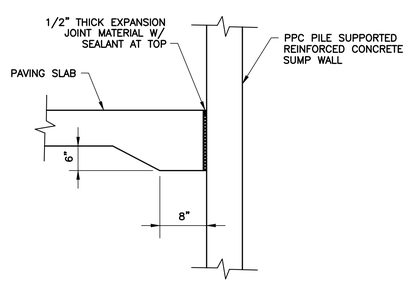

TYPICAL SECTION @ PAVING SLAB / PUMP PIT WALL JUNCTION

N.T.S.

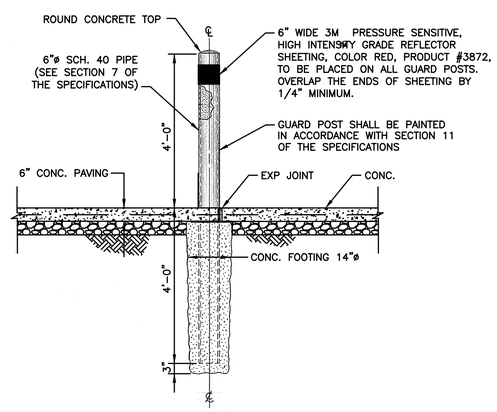

GUARD POST DETAIL

N.T.S.

CIVIL

REV.	DATE	DESCRIPTION	BY

SEWERAGE AND WATER BOARD OF NEW ORLEANS

CONTRACT 3669
HURRICANE KATRINA RELATED
404 HAZARD MITIGATION GRANT PROGRAM
REPLACEMENT OF SEWAGE PUMPING STATION NO. 6

MISCELLANEOUS SITEWORK DETAILS

DESIGN ENGINEERING INC.
3330 West Esplanade Ave. S.
Suite 205
Metairie, LA 70002
(504) 836-2155

DR. TH/BD
TRC. ---
CK. DS/CW
AP. JH
SCALE: AS SHOWN
DATE: JANUARY 2012

GENERAL SUPERINTENDENT

DWG. No. 12040-W-63

SET NO.

SHEET NO. 6

PRINTED Aug 08, 2013 – 1:54pm FILENAME – J:\6005.1-GOSHEP-2013\Contract 3669 – SPS No. 6\SHT 6_NO 6_Misc Site Det.dwg

SEWER NOTES

1. THE CONTRACTOR SHALL FURNISH ALL LABOR, SUPERVISION, MATERIALS AND EQUIPMENT REQUIRED FOR INSTALLATION OF NEW SEWER MAINS, MANHOLES, HOUSE CONNECTIONS, ETC., REQUIRED BY THESE DRAWINGS AND SPECIFICATIONS. ALL WORKMANSHIP AND MATERIALS SHALL CONFORM WITH THE GENERAL SPECIFICATIONS OF THE SEWERAGE AND WATER BOARD EXCEPT AS NOTED HEREINAFTER.

2. FOR ANY PIPES INSTALLED IN THE PUBLIC RIGHT-OF-WAY, THE CONTRACTOR SHALL NOTIFY THE CHIEF OF NETWORKS OF THE S&WB IN WRITING NOT LESS THAN THREE NOR MORE THAN TEN DAYS IN ADVANCE OF STARTING THE JOB SO AS TO SCHEDULE THE INSPECTION OF THE WORK. FAILURE TO DO SO PRIOR TO STARTING WORK WILL REQUIRE THE CONTRACTOR TO EXPOSE THE BEDDING ON ALL PIPE PREVIOUSLY INSTALLED. COPIES OF THE NOTICE TO START WORK SHALL BE SENT TO THE GRAVITY SYSTEM SUPT. AT 2900 PEOPLES AVENUE.

3. SEWER MAINS AND INTERCONNECTING MANHOLES SHALL BE INSTALLED AT ELEVATIONS INDICATED UNLESS CHANGED BY THE S&WB ENGINEER. "BLIND MANHOLE" WILL NOT BE ALLOWED; ALL MAINS MUST BE LAID CONTINUOUSLY AND FROM THE LOW END OF THE SYSTEM. DEPTHS OF SEWER MAINS FOR PAYMENT PURPOSES SHALL BE DETERMINED BY MEASUREMENT FROM THE INVERT TO THE TOP OF CASTINGS AT FINISH GRADE OF CONNECTING MANHOLES.

4. MATERIAL FOR SEWER MAINS SHALL BE SOLID WALL POLYVINYL CHLORIDE (PVC) PIPE. PIPE SECTIONS AND FITTINGS SHALL HAVE A BELL HOUSING GASKETED JOINT SOLVENT WELDED TO THE PIPE AT THE FACTORY.

   THE ELASTOMERIC GASKETS SHALL BE AS RECOMMENDED BY THE MANUFACTURER, AND ASTM D-3212 AND SHALL BE GLUED OR HELD IN PLACE BY RETAINER RINGS.

   THE SOLID WALL PVC PIPE 6" THROUGH 15" SHALL BE MANUFACTURED IN ACCORDANCE WITH ASTM D3034 SPECIFICATIONS AND TO A PIPE DIMENSION RATIO (SDR) OF 26 (SEE PAR. 16). THE FITTINGS AND BELL STOCK FOR SOLID WALL PVC PIPE SHALL HAVE A SOLID WALL PVC PIPE OF THE SAME INSIDE DIAMETER.

   PVC SEWER MAINS SIZES 18" THROUGH 27" SHALL BE SOLID WALL PVC PIPE CONFORMING WITH ASTM F-679, CLASS T-1 WITH DIMENSIONS AS SHOWN IN PARAGRAPH 16 HEREIN UNLESS STATED OTHERWISE ON THE APPROVED LENGTH WITH INTEGRAL CAST BELLS AND ELASTOMERIC GASKETS AS RECOMMENDED BY THE MANUFACTURER AND ASTM D-3212.

5. BEDDING AND FOUNDATIONS FOR MAINS SHALL CONFORM WITH S&WB DWG. 4697-E5A REV. 10 EXCEPT AS NOTED BELOW.

   STANDARD SHEETING & BRACING SHALL COMPLY WITH DWG. 4697-E5A REV.10. ALTHOUGH THE CONTRACTOR SHALL HAVE THE OPTION OF INSTALLING ANY OF THE ABOVE TYPE PIPE MATERIALS THE SAME TYPE AND SIZE MUST BE INSTALLED BETWEEN MANHOLES.

6. INSTALLATION OF THE SOLID WALL PVC PIPE SHALL CONFORM WITH SECTION D, "THE CONSTRUCTION OF SEWERS" AND PLASTIC PIPE ASSOCIATION SPECIFICATION UNI-B-78, "RECOMMENDED PRACTICE FOR THE INSTALLATION OF POLYVINYL CHLORIDE (PVC) SEWER PIPE. THE TRENCH BOTTOM SHALL BE RELATIVELY SMOOTH AND FREE FROM ROCKS, ROOTS, ETC. AFTER THE SHEETING AND/OR FOUNDATION LUMBER IS PLACED THE PIPE SHALL BE LAID ON A SMOOTH BED OF CRUSHED STONE.

   THE CRUSHED STONE SHALL BE EXTENDED UNDER, AROUND AND 6" OVER THE TOP OF THE PIPE COMPACTED IN LAYERS NOT GREATER THAN 6" BY A MECHANICAL VIBRATING COMPACTOR (APPROVED BY THE BOARD'S ENGINEER) UNTIL A MINIMUM OF 85% STD PROCTOR DENSITY IS ATTAINED FOR THE FULL WIDTH OF THE TRENCH: ALL AS SHOWN ON S&WB DWGS. 4697-E5A REV. 10 OR REV. 2. THE CRUSHED STONE SHALL BE PLACED AND CONSOLIDATED UNDER THE PIPE HAUNCHES TO PROVIDE MAXIMUM SIDE SUPPORT TO THE PIPE WHILE AVOIDING DISPLACEMENT AND MISALIGNMENT OF THE PIPE. IN LIEU OF SHELL EMBEDMENT MATERIAL SHALL BE CLASS I ANGULAR MATERIAL (¼" TO 1½"). ASTM 2321 (LATEST EDITION); I.E., CORAL, SLAG, CINDERS, CRUSHED CONCRETE OR CRUSHED STONE. THE BOARD RESERVES THE RIGHT TO APPROVE THE TYPE OF MATERIAL. THE MAXIMUM ALLOWED DEFLECTION FOR INSTALLED PVC SEWER PIPE IS 7 PERCENT REDUCTION IN ITS ACTUAL VERTICAL INSIDE DIAMETER NOT THE MINIMUM ALLOWED BY THE ASTM SPECIFICATION. PIPE EXCEEDING THIS ALLOWED DEFLECTION AT ANY TIME PRIOR TO ACCEPTANCE, SHALL BE REMOVED AND REPLACED WITH NEW PIPE AND REINSTALLED AS PER THE ABOVE SPECIFICATIONS AT THE CONTRACTORS EXPENSE.

   A MINIMUM OF 100% OF THE P.V.C. SOLID WALL PIPE WILL BE MANDRELED. THE CONTRACTOR WILL INSTALL THE PULL LINES AND PASS THE MANDREL THROUGH THE MAINS SELECTED BY THE ENGINEER. TEST WILL BE WITNESSED BY THE CONTRACTOR AND THE ENGINEER. THE SEWERAGE AND WATER BOARD WILL PROVIDE THE MANDRELS FOR ALL TESTS AND HAVE THE OPTION OF PASSING THE MANDRELS AT ANY TIME AFTER INSTALLATION AND FINAL BACKFILL OF THE TRENCHES AND BEFORE FINAL ACCEPTANCE. THE CONTRACTOR SHALL BEAR THE COST OF ANY RETESTING IF REQUIRED AND WILL BE ASSESSED $100 FOR EACH OCCURRENCE IN EACH SECTION BETWEEN MANHOLES.

7. MANHOLE SHALL CONFORM WITH SECTION D OF THE GENERAL SPECIFICATION AND DRAWING NO. 6178-B6 REV. 8. PRECAST MANHOLES SHALL ALSO CONFORM WITH ASTM C-478 EXCEPT WHERE SHOWN ON THE DRAWINGS. SHORT SECTIONS OF PIPE WITH BELL FITTING AND WATER STOPS AS RECOMMENDED BY THE MANUFACTURER AND AS SHOWN ON DRAWING NO. 6312-E5 SHALL BE USED AS CONNECTORS FOR BRICK MANHOLES.

   PRECAST MANHOLE CONNECTIONS SHALL UTILIZE KOR-N-SEAL BOOTS. MANHOLE STEPS MUST CONFORM WITH DWGS. NO. 6178-B6.

8. HOUSE CONNECTIONS SHALL BE SIX-INCH PIPE EXTENDED TO THE PROPERTY LINE AS SHOWN ON DWGS. 6187-E5. THE USE OF SADDLES IN ALL TYPES OF PIPE SYSTEMS WILL NOT BE PERMITTED; ALL SUCH CONNECTIONS SHALL BE MADE WITH THE USE OF FITTINGS. ALL PIPE AND FITTINGS SHALL BE OF THE SAME MATERIALS AS THE MAIN SEWER UNLESS APPROVED BY THE S&WB. HOUSE CONNECTIONS SHALL HAVE A MINIMUM OF 3½ FEET AND MAXIMUM OF 4 FEET OF COVER MEASURED FROM TOP OF CURB. THE 6" DIAMETER SEWER HOUSE CONNECTION PIPE SHALL BE SOLID WALL PVC PLASTIC PIPE HAVING A MINIMUM WALL THICKNESS OF SDR 26 (0.241"). PLASTIC PIPE SHALL END 2' TO 4' INSIDE THE PROPERTY LINE WITH A RUBBER GASKETED PLASTIC CAP. HOUSE CONNECTIONS SHALL NOT REQUIRE BRACING, FOUNDATION LUMBER OR SHELLS. THE LOCATION OF ALL SEWER HOUSE CONNECTION SHALL BE IMPRINTED ON THE CURB WITH AN "S", NOT LESS THAN 3" HIGH AND 1/4" DEEP.

9. AT POINTS OF TIE-INS TO THE EXISTING SYSTEM, THE NEW PIPE MATERIAL SHOULD MATCH THE EXISTING. IF NOT, THE CONNECTION SHALL BE MADE WITH USE OF A COUPLING AND BUSHING ADAPTER (MISSION RUBBER CO., FERNCO OR EQUAL) CONFORMING TO ASTMC-425.

10. CONTRACTOR SHALL VERIFY ELEVATION OF EXISTING INVERTS.

11. THE SEWER INSTALLATION SHALL BE CHECKED AGAINST THE DRAINAGE PLAN. ANY MODIFICATION TO THE DRAINAGE PLAN AFTER THIS DATE SHALL VOID THE SEWER PLAN; HAVING PRIOR APPROVAL.

12. THE LOCATION OF EXISTING UTILITIES SHOWN ARE APPROXIMATE. THE CONTRACTOR SHALL VERIFY SAME AND SHALL TAKE NECESSARY PRECAUTIONS TO PROTECT THEM. THE BOARD IS NOT RESPONSIBLE FOR OTHER UNDERGROUND UTILITY SERVICES THAT ARE NOT SHOWN ON THE DRAWINGS AND THE CONTRACTOR SHALL NOT RECEIVE ADDED COMPENSATION FOR THE EXTRA WORK REQUIRED DUE TO THEIR OMISSION.

13. INFILTRATION RATE SHALL BE 0 (ZERO) GALLONS PER INCH PER MILE PER 24 HOURS; ANY DETECTABLE LEAKS SHALL BE REPAIRED BY THE CONTRACTOR. THE INFILTRATION TEST IS THE RESPONSIBILITY OF THE CONTRACTOR AND SHALL BE WITNESSED BY THE BOARD'S REPRESENTATIVE.

14. BEFORE FINAL ACCEPTANCE THE CONTRACTOR SHALL LOCATE AND CERTIFY THE CORRECT LOCATION AND DEPTH OF ALL HOUSE CONNECTIONS.

15. FINAL ACCEPTANCE OF THE SYSTEM IS CONTINGENT UPON A 90 DAY MAINTENANCE PERIOD FOLLOWING A SATISFACTORY INSPECTION BY THE S&WB ENGINEER. PRIOR TO FINAL ACCEPTANCE THE BOARD WILL VERIFY THE DEFLECTION IN THE SOLID WALL PVC MAINS AS STATED HEREINBEFORE AND INSPECT A MINIMUM OF 10% OF THE SYSTEM WITH A REMOTE T.V. UNIT. THE PULL LINE SHALL BE PLACED IN THE LINES BY THE CONTRACTOR.

    THE CONTRACTOR WILL BE REQUIRED TO REPAIR IN AN APPROVED MANNER ALL DEFECTS DISCLOSED BY THIS INSPECTION BEFORE FINAL ACCEPTANCE. THE BOARD SHALL RESERVE THE RIGHT TO T.V. THE ENTIRE SEWAGE SYSTEM. THE COST OF ALL TESTS, INSPECTION AND PULLING OF MANDRELS SHALL BE INCLUDED IN THE COST OF THE SEWER MAIN.

    BEFORE FINAL INSPECTION OF THE SYSTEM, THE CONTRACTOR SHALL SUBMIT AN "AS BUILT" DRAWING TO THE BOARD SHOWING CHANGES IN LINE OR GRADE FROM THE ORIGINAL DRAWINGS, AND THE LOCATION OF ALL HOUSE CONNECTIONS AS PER SEWERAGE AND WATER BOARD REQUIREMENT. THIS "AS BUILT" DRAWING SHALL BE CERTIFIED CORRECT BY THE OWNER-DEVELOPER, LICENSED LOUISIANA SURVEYOR, AND CONTRACTOR, THAT IN THE FUTURE, ANY DEVIATION FROM THIS "AS-BUILT" DRAWING SHALL BE CORRECTED AT THE COST OF THE OWNER-DEVELOPER, AS REQUIRED BY SEWERAGE AND WATER BOARD.

	CERTIFIED CORRECT
_____ (OWNER-DEVELOPER)	_____ DATE
_____ (SURVEYOR)	_____ DATE
_____ (CONTRACTOR)	_____ DATE

16. THE FOLLOWING DIMENSIONS AND UNITS ARE REQUIRED FOR PVC SEWER PIPE (SDR-26) FOR SIZES 6" THROUGH 15"; ASTM F-679 CLASS T-1 FOR SIZE 18"-27".

NOM. SIZE (IN.)	O.D. AVG. (IN.)	MIN TOL. (IN.)	WALL. THK. (IN.) (MIN)
6	6.275	±0.011	0.241
8	8.400	±0.012	0.323
10	10.500	±0.015	0.404
12	12.500	±0.018	0.481
15	15.300	±0.023	0.588
18	18.701	±0.028	0.536
21	22.047	±0.033	0.632
24	24.803	±0.033	0.711
27	27.953	±0.042	0.801

17. ABANDONED SEWER MAINS MUST BE PLUGGED IN THE MANHOLE, CASTINGS REMOVED AND RETURNED TO THE S&WB CENTRAL YARD. MANHOLES MUST BE FILLED WITH SAND.

18. FORCE MAIN SEWER PIPE MATERIAL

A. PVC PIPE

1. PVC PIPE SHALL CONFORM TO AWWA C905 (LATEST REVISION), PRESSURE CLASS 200 (DR25) SPECIFICATIONS AND SHALL HAVE AN OUTSIDE DIAMETER EQUAL TO THAT OF CAST IRON PIPE.
2. JOINTS SHALL BE PUSH-ON, BELL AND SPIGOT RUBBER GASKET TYPE WITH LOCKED-ON RUBBER GASKETS.
3. FITTINGS FOR USE WITH PVC PIPE SHALL BE DUCTILE IRON WITH MECHANICAL JOINTS INSTALLED WITH POLYETHYLENE ENCASEMENT AS SPECIFIED FOR DUCTILE IRON PIPE AND FITTINGS.

B. DUCTILE IRON PIPE AND FITTINGS

1. DUCTILE IRON PIPES SHALL CONFORM TO AWWA C150 (LATEST REVISION), THICKNESS CLASS 56 WITH AWWA C110 CLASS 350 FITTINGS. JOINTS SHALL BE PUSH-ON TYPE, BELL AND SPIGOT WITH RUBBER GASKETS MEETING AWWA C111 SPECIFICATIONS. MECHANICAL JOINTS SHALL MEET AWWA C111 SPECIFICATIONS.
2. FITTINGS SHALL BE DUCTILE IRON MEETING AWWA C110 (LATEST REVISION), CLASS 250 SPECIFICATIONS. FITTINGS SHALL BE MECHANICAL JOINTS.
3. DUCTILE IRON PIPE AND FITTINGS SHALL HAVE AN ASPHALTIC OUTSIDE COATING IN ACCORDANCE WITH AWWA C151 SPECIFICATIONS AND BE INSTALLED IN A POLYETHYLENE ENCASEMENT MEETING AWWA C105 (LATEST REVISION) SPECIFICATIONS.
4. DUCTILE IRON PIPE AND FITTINGS SHALL HAVE A FACTORY INSTALLED INTERNAL CERAMIC EPOXY LINING, PROTECTO 401, 40 MILS NOMINAL THICKNESS.

C. JOINT RESTRAINT DEVICES

1. IN AREAS WHERE RESTRAINED JOINTS ARE SHOWN OR SPECIFIED, FITTINGS SHALL BE RESTRAINED BY USE OF A MECHANICAL JOINT RESTRAINT GLAND FOR USE WITH C-905 PVC PIPE. RESTRAINT HARNESS TO BE SERIES NO. 2030 MANUFACTURED BY EBBA IRON SALES, INC., OR EQUAL.
2. IN AREAS WHERE RESTRAINED JOINTS ARE SHOWN OR SPECIFIED ON STRAIGHT PIPE, JOINTS SHALL BE RESTRAINED BY USE OF A BELL RESTRAINT HARNESS FOR C-905 PVC PIPE. , RESTRAINT HARNESS TO BE SERIES NO. 2830 MANUFACTURED BY EBBA IRON SALES, INC., OR EQUAL.
3. RESTRAINT DEVICES FOR PVC PIPE SHALL HAVE A WORKING PRESSURE EQUAL TO THE FULL RATE PRESSURE OF THE PVC PIPE, ON WHICH THEY ARE INSTALLED, WITH A MINIMUM OF 2:1 SAFETY FACTOR. RESTRAINERS SHALL MEET OR THE REQUIREMENTS OF UNI-B-13-92, "RECOMMENDED PERFORMANCE SPECIFICATIONS FOR JOINT RESTRAINING DEVICES USED WITH PVC PIPE."
4. IN AREAS WHERE RESTRAINED JOINTS ARE SHOWN OR SPECIFIED, FITTINGS SHALL BE RESTRAINED BY USE OF A MECHANICAL JOINT RESTRAINT GLAND FOR USE WITH CLASS 56 DUCTILE IRON PIPE. RESTRAINT GLAND TO BE SERIES NO. 110SD MANUFACTURED BY EBBA IRON SALES, INC., OR EQUAL.
5. IN AREAS WHERE RESTRAINED JOINTS ARE SHOWN OR SPECIFIED ON STRAIGHT PIPE, JOINTS SHALL BE RESTRAINED BY USE OF A BELL RESTRAINT HARNESS FOR CLASS 56 DUCTILE IRON PIPE. RESTRAINT HARNESS TO BE SERIES NO. 110SD MANUFACTURED BY EBBA IRON SALES, INC., OR EQUAL.
6. JOINT RESTRAINT DEVICES ON DUCTILE IRON PIPE SHALL HAVE A MINIMUM WORKING PRESSURE OF 250 PSI, WITH A 2:1 SAFETY FACTOR. RESTRAINTS SHALL MEET ANSI/AWWA C151/A21.51 AND ANSI/AWWA C150/A21.50.

D. TESTING

1. ALL NEW MAINS, VALVES, AND SERVICES SHALL BE INSTALLED PRIOR TO PRESSURE TESTING. THE SYSTEM SHALL BE PRESSURE TESTED BY THE CONTRACTOR IN THE PRESENCE OF THE S&WB INSPECTOR AND IN ACCORDANCE WITH PARAGRAPH F-15 OF THE GENERAL SPECIFICATIONS. THE TEST SHALL BE SCHEDULED BY THE S&WB INSPECTOR. ALL AIR SHALL BE BLED FROM THE SYSTEM PRIOR TO TESTING. THE CONTRACTOR SHALL BE RESPONSIBLE FOR ALL COSTS INCURRED AS A RESULT OF TEST FAILURES, INCLUDING REPAIRS TO DEFECTS.

2. THROUGHOUT THE TEST, THE PRESSURE WILL BE MAINTAINED AT 100 PSI. IF THE PRESSURE DROPS TO 95 PSI IT MUST BE INCREASED BACK TO 100 PSI BY ADDING ADDITIONAL WATER TO THE PIPE. EACH SUBSEQUENT "PUMP UP" MUST USE LESS WATER PER HOUR THAN PREVIOUS OR THE MAIN WILL NOT BE ACCEPTED. IF THE CONTRACTOR ALLOWS THE PRESSURE TO FALL BELOW 95 PSI AT ANY POINT, THE MAIN WILL NOT BE ACCEPTED. THE TEST SHALL BE PERFORMED FOR A MINIMUM OF 3 HOURS AND A MAXIMUM OF 24 HOURS. ALLOWABLE LEAKAGE SHALL NOT EXCEED 20 GALLONS OF WATER PER 24 HOURS, FOR EACH MILE OF PIPE PER INCH OF INSIDE DIAMETER FOR PIPES 12 IN. AND SMALLER. FOR PIPES LARGER THAN 12 IN., THE ALLOWABLE LEAKAGE SHALL BE 10 GALLONS OF WATER PER 24 HOURS, FOR EACH MILE OF PIPE, PER INSIDE INCH DIAMETER.

SEWER NOTES

I. GENERAL

1. IT IS TO BE UNDERSTOOD THAT ALL REFERENCES TO "THE SEWERAGE AND WATER BOARD (S&WB) ENGINEER" THROUGHOUT THIS DOCUMENT SHALL REFER TO THE GENERAL SUPERINTENDENT OF THE S&WB OR HIS APPOINTED REPRESENTATIVE, AND ALL REFERENCES TO "THE S&WB INSPECTOR" THROUGHOUT THIS DOCUMENT SHALL REFER TO THE INSPECTOR ASSIGNED TO THE PROJECT BY THE S&WB ENGINEER. THE S&WB INSPECTOR SHALL REPRESENT THE S&WB ENGINEER IN HIS/HER ABSENCE. IT IS ALSO TO BE UNDERSTOOD THAT ALL REFERENCES TO S&WB DRAWINGS AND SPECIFICATIONS REFER TO THE LATEST EDITION OR REVISION.

2. THE CONTRACTOR SHALL HAVE AN INDIVIDUAL WITH A WASTEWATER COLLECTION CLASS IV LICENSE, OBTAINED THROUGH THE LOUISIANA DEPARTMENT OF HEALTH AND HOSPITALS, ON SITE AT ALL TIMES DURING INSTALLATION OF THE SEWER LINES AND APPURTENANCES.

3. THE CONTRACTOR SHALL FURNISH ALL LABOR, SUPERVISION, MATERIALS, AND EQUIPMENT REQUIRED FOR THE INSTALLATION OF NEW SEWER MAINS, MANHOLES, HOUSE CONNECTIONS, ETC., REQUIRED BY THE PROJECT DRAWINGS AND SPECIFICATIONS.

4. ALL WORKMANSHIP AND MATERIALS SHALL CONFORM TO THE GENERAL SPECIFICATIONS OF THE S&WB. ANY MODIFICATION FROM THE DESIGN DRAWINGS MUST BE APPROVED BY THE S&WB ENGINEER PRIOR TO CONSTRUCTION.

5. PRIOR TO THE INSTALLATION OF ANY S&WB FACILITIES, THE ENTIRE AREA WITHIN THE PUBLIC RIGHT-OF-WAY, INCLUDING THE ENTIRE WIDTH OF ANY SERVITUDES ADJACENT TO THE FRONT PROPERTY LINE, PLUS AN ADDITIONAL 3 FT. MUST BE FILLED TO THE FINISHED GRADE.

6. ALL ELEVATIONS SHOWN ON THE DRAWINGS REFER TO CAIRO DATUM IN WHICH 0.00 FT. NGVD IS EQUAL TO 20.43 FT. CAIRO DATUM.

7. IT IS TO BE UNDERSTOOD THAT WHEREVER SAND IS STIPULATED IN THE SPECIFICATIONS OR DRAWINGS, IT SHALL REFER TO PUMPED MISSISSIPPI RIVER SAND OR ANY NATURAL SAND DEPOSIT MEETING THE REQUIREMENTS OF AASHTO A-3 OR ASTM-SP.

8. THE CONTRACTOR SHALL NOTIFY THE GENERAL SUPERINTENDENT (625 ST. JOSEPH ST. N.O. LA 70165), WITH COPIES TO THE CHIEF OF ENGINEERING (8800 S. CLAIBORNE AVE N.O. LA 70118), AND THE CHIEF OF CONSTRUCTION ADMINISTRATION AND INSPECTION (8800 S. CLAIBORNE AVE N.O. LA 70118) OF THE S&WB IN WRITING NOT LESS THAN THREE NOR MORE THAN TEN DAYS IN ADVANCE OF STARTING THE PROJECT SO AS TO SCHEDULE THE INSPECTION OF ANY S&WB WORK. FAILURE TO DO SO PRIOR TO STARTING THIS WORK SHALL REQUIRE THE CONTRACTOR TO EXPOSE THE BEDDING ON ALL PIPE, OR ANY OTHER CONCEALED WORK PREVIOUSLY INSTALLED IN ORDER TO OBTAIN THE APPROVAL OF THE S&WB INSPECTOR. ANY WORK PERFORMED WITHOUT A S&WB INSPECTOR'S APPROVAL WILL NOT BE ACCEPTED BY THE S&WB NOR TIED INTO THE S&WB'S COLLECTION SYSTEM.

9. THE LOCATION OF EXISTING UTILITIES SHOWN ON THE DRAWINGS SHOULD BE CONSIDERED APPROXIMATE. THE CONTRACTOR SHALL VERIFY THE ELEVATION OF ALL EXISTING STRUCTURE INVERTS AND THE LOCATION OF ALL EXISTING UTILITIES PRIOR TO THE START OF WORK, AND SHALL BE RESPONSIBLE FOR ANY NEGLIGENCE ON HIS PART IN PROTECTING THEM. THE LOCATION OF SEWER AND WATER HOUSE CONNECTIONS CAN BE OBTAINED FROM THE S&WB.

10. ALL S&WB MAINTAINED SEWER WORK PERFORMED BY THE CONTRACTOR WILL BE SUBJECT TO THE APPROVAL OF THE S&WB INSPECTOR. THE CONTRACTOR SHALL PROVIDE THE S&WB INSPECTOR FULL ACCESS TO THE WORK THROUGHOUT CONSTRUCTION AND ABIDE BY ANY JUSTIFIABLE S&WB INSPECTOR'S REQUEST TO EXPOSE ANY AND ALL WORK INSTALLED BY THE CONTRACTOR.

11. BACKFILL MATERIAL FOR ALL UTILITIES SHALL BE SAND EITHER COMPACTED MECHANICALLY IN 6 IN. LIFTS OR FLOODED IN 3 FT. LIFTS. COMPACTION SHALL BE PERFORMED TO 95% MAXIMUM DRY DENSITY, NEAR OPTIMUM WATER CONTENT, AND SHALL MEET THE COMPACTION CHARACTERISTICS OF ASTM D-1557

12. SPECIFICATIONS FOR SEWER FORCE MAIN PIPE SHALL BE JOB SPECIFIC.

II. PIPE MATERIAL

1. MATERIAL FOR SEWER MAINS SHALL BE SOLID WALL PVC PIPE, MANUFACTURED IN ACCORDANCE WITH ASTM D-3034 SPECIFICATIONS AND TO A SDR (STRENGTH DIMENSION RATIO) OF 26 WITH ELASTOMERIC GASKETS. THE ELASTOMERIC GASKETS AND RETAINER RINGS SHALL BE INSTALLED BY THE MANUFACTURER IN ACCORDANCE WITH ASTM D-3212 AND F-477.

2. THE FITTINGS FOR SOLID WALL PVC PIPE SHALL BE THE SAME INSIDE DIAMETER AS THE SOLID WALL PVC WITH AN SDR OF 35.

3. PVC SEWER MAINS, SIZES 18 IN. THROUGH 27 IN. SHALL BE SOLID WALL PVC PIPE CONFORMING TO ASTM F-679.

4. THE MAXIMUM ALLOWABLE COMPRESSION FOR INSTALLED PVC SEWER PIPE IS 7.5 PERCENT (7.5%) OF ITS ORIGINAL VERTICAL INSIDE DIAMETER. PIPE EXCEEDING THIS ALLOWABLE COMPRESSION SHALL BE REMOVED AND REPLACED WITH NEW PIPE, REINSTALLED AT THE CONTRACTOR'S EXPENSE.

5. AT POINTS OF TIE-INS TO THE EXISTING SYSTEM, THE NEW PIPE MATERIAL SHOULD MATCH THE EXISTING. IF THE NEW MATERIAL DOES NOT MATCH THE EXISTING MATERIAL, THE CONNECTION SHALL BE MADE WITH THE USE OF A COUPLING AND BUSHING ADAPTER INTENDED FOR THAT PURPOSE, ARC (MISSION RUBBER CO.), FERNCO, OR EQUAL, CONFORMING TO ASTM C-425.

6. DUCTILE IRON PIPE SHALL BE USED WHERE SPECIFIED ON THE CONSTRUCTION DRAWINGS AND SHALL CONFORM TO SECTION II-B, "DUCTILE IRON" OF THE S&WB 7260 WATER NOTES EXCEPT THAT THE INTERIOR LINING SHALL BE CERAMIC EPOXY, PROTECTO 401, OR APPROVED EQUAL, AND MUST BE FACTORY INSTALLED WITH 40 MILS NOMINAL THICKNESS.

III. SEWER MAIN INSTALLATION

1. THE SEWER MAIN MUST BE LAID IN A SEPARATE TRENCH FROM ALL OTHER UTILITIES. THE MINIMUM ALLOWABLE HORIZONTAL DISTANCE BETWEEN THE SEWER MAIN AND THE WATER MAIN SHALL BE 6 FT., AND A MINIMUM VERTICAL SEPARATION OF 18 IN. AS STIPULATED IN LOUISIANA ADMINISTRATIVE CODE TITLE FIFTY-ONE (51) PUBLIC HEALTH-SANITARY CODE PART XII WATER SUPPLIES. THE MINIMUM ALLOWABLE HORIZONTAL DISTANCE BETWEEN THE SEWER MAIN AND OTHER UTILITIES SHALL BE 3 FT., AND A MINIMUM VERTICAL CLEARANCE OF 12 IN. ABOVE OR 12 IN. BELOW OTHER UTILITIES. FOR PAYMENT PURPOSES, DEPTHS OF SEWER MAINS SHALL BE DETERMINED BY THE AVERAGE MEASUREMENTS FROM INVERTS TO THE TOP OF CASTINGS AT FINISHED GRADE OF CONNECTING MANHOLES. ALL DIMENSIONS BETWEEN UTILITIES SHALL BE MEASURED FROM OUTSIDE DIAMETER TO OUTSIDE DIAMETER.

2. SEWER MAINS AND INTERCONNECTING MANHOLES SHALL BE INSTALLED AT ELEVATIONS INDICATED ON THE PLANS UNLESS CHANGED BY THE S&WB ENGINEER. ALL MAINS MUST BE LAID CONTINUOUSLY FROM MANHOLE TO MANHOLE, LAID FROM THE LOW END OF THE SYSTEM WITH THE BELL FACING UPSTREAM, AND MUST BE OF THE SAME SIZE PIPE DIAMETER. THE MINIMUM DEPTH OF A SEWER MAIN SHALL BE 5.5 FT. FROM SURFACE TO INVERT.

3. INSTALLATION OF THE SOLID WALL PVC PIPE SHALL CONFORM TO SECTION D, "THE CONSTRUCTION OF SEWERS," OF THE GENERAL SPECIFICATIONS OF THE S&WB. THE TRENCH BOTTOM SHALL BE SMOOTH AND FREE FROM ROCKS, ROOTS, ETC. AFTER THE SHEETING AND/OR FOUNDATION LUMBER IS PLACED, THE PIPE SHALL BE LAID ON A SMOOTH BED OF APPROVED BEDDING MATERIAL. BEDDING AND FOUNDATIONS FOR MAINS AND STANDARD SHEETING AND BRACING SHALL COMPLY WITH S&WB DWG. NO. 4697-E5A. THE BEDDING MATERIAL SHALL BE EXTENDED UNDER, AROUND, AND OVER THE TOP OF THE PIPE AND COMPACTED IN LAYERS NOT GREATER THAN 6 IN. BY A MECHANICAL VIBRATING COMPACTOR APPROVED BY THE S&WB ENGINEER UNTIL A MINIMUM OF 95% STANDARD PROCTOR DENSITY IS ATTAINED AT OR NEAR OPTIMUM MOISTURE CONTENT FOR THE FULL WIDTH OF THE TRENCH. THE BEDDING MATERIAL SHALL BE CLASS I ANGULAR MATERIAL (1/4 IN. TO 1-1/2 IN.), ASTM D2321 OR ASTM C33. THE S&WB ENGINEER RESERVES THE RIGHT TO APPROVE THE TYPE OF BEDDING MATERIAL TO BE USED.

4. FILTER FABRIC SHALL BE INSTALLED AROUND THE BEDDING AND UNDER THE BACKFILL IN ALL SEWER INSTALLATIONS AS SHOWN IN S&WB DWG. NO 4697-E5A, AND CONFORM BY WEIGHT TO ASTM D1910. THE FILTER FABRIC SHALL BE DOTD CLASS C OR D. NON-WOVEN PERVIOUS SHEETS OF PLASTIC YARN MIRAFI 170N, OR AN EQUAL APPROVED BY THE S&WB ENGINEER, CONSTRUCTED SO THE YARNS WILL RETAIN THEIR RELATIVE POSITION WITH RESPECT TO EACH OTHER. EDGES OF THE FABRIC SHALL BE FINISHED TO PREVENT THE OUTER YARN FROM PULLING AWAY FROM THE FABRIC. THE FABRIC SHALL BE INSTALLED AS FOLLOWS:

   A. AFTER THE TRENCH IS EXCAVATED, THE FOUNDATION LUMBER SHALL BE PLACED IN THE BOTTOM OF THE TRENCH AS SHOWN ON THE STANDARD DRAWINGS. THE FILTER FABRIC SHALL BE CUT TO THE NEEDED WIDTH, INCLUDING ALLOWANCES FOR "LOOSE" PLACEMENT IN THE TRENCH, WITH A DOUBLE OVERLAP ON TOP OF THE BEDDING MATERIAL AFTER PLACEMENT. THE FABRIC SHALL BE LAID OVER THE FOUNDATION LUMBER IN THE TRENCH ALONG THE PIPES ALIGNMENT WITH AN 18 IN. MINIMUM OVERLAP AT THE ENDS OF SUBSEQUENT LENGTHS. CARE SHOULD BE TAKEN TO PLACE THE FABRIC TIGHTLY AGAINST THE SOIL SO THAT NO VOIDS OCCUR OUTSIDE THE FABRIC. WRINKLES OR FOLDS SHOULD BE AVOIDED. THE SIDES OF THE FABRIC WHICH WILL BE USED AS A DOUBLE-TOP OVERLAP SHOULD TEMPORARILY BE PINNED TO THE SIDES OF THE TRENCH.

   B. AFTER INSTALLING THE FABRIC, AN INITIAL 6 IN. LAYER OF BEDDING MATERIAL SHALL BE PLACED AND COMPACTED TO THE PROPER GRADE BEFORE PLACING THE SEWER PIPE. THE REMAINDER OF THE BEDDING MATERIAL SHALL THEN BE PLACED AROUND AND ABOVE THE PIPE AND COMPACTED. COMPACTION IS REQUIRED TO SEAT THE FABRIC AND BEDDING MATERIAL AGAINST THE TRENCH WALL AND TO REDUCE SETTLEMENT.

   C. AFTER COMPACTION, THE TWO EDGES OF THE FILTER FABRIC SHALL BE UNFASTENED AND OVERLAPPED FOR THE FULL WIDTH OF THE TRENCH ON TOP OF THE BEDDING MATERIAL. THE BACKFILL MATERIAL SHALL THEN BE PLACED ON TOP OF THE FILTER FABRIC AND COMPACTED.

IV. MANHOLES

1. MANHOLES SHALL CONFORM TO SECTION D OF THE GENERAL SPECIFICATIONS AND S&WB DWG. NOS. D-870. SHORT SECTIONS OF PIPE WITH BELL FITTINGS AND WATER STOPS, AS RECOMMENDED BY THE MANUFACTURER AND AS SHOWN ON S&WB DWG. NO. 8178-SD, SHALL BE USED AS CONNECTORS FOR BRICK MANHOLES. AS AN ALTERNATIVE, A SAND IMPREGNATED PVC STUB, APPROVED BY THE S&WB ENGINEER, MAY BE USED AND GROUTED IN PLACE USING A TYPE THREE HIGH EARLY STRENGTH CEMENT, OR QUICK SETTING EMBECO, OR SIMILAR MATERIAL APPROVED BY THE S&WB ENGINEER. KOR-N-SEAL BOOTS, OR APPROVED EQUAL, AS SHOWN ON S&WB DWG. NO. 8178-SD, SHALL BE USED FOR PRECAST MANHOLE PIPE CONNECTIONS.

2. MANHOLE STEPS SHALL CONFORM TO S&WB DWG. NO. D-1359.

3. ABANDONED SEWER MAINS MUST BE PLUGGED IN THE MANHOLE. WALLS OF ABANDONED MANHOLES SHALL BE REMOVED TO A MINIMUM OF 2 FT. BELOW FINISHED GRADE AND THE ABANDONED MANHOLES MUST BE FILLED WITH SAND AND FLOODED. CASTINGS AND COVERS ARE TO BE REMOVED AND RETURNED TO THE S&WB CENTRAL YARD, 2900 PEOPLES AVE N.O. LA 70122.

4. ALL MANHOLE FOUNDATION SLABS SHALL BE PLACED ON A 6 IN. LAYER OF CRUSHED STONE OR APPROVED EQUAL BEDDING MATERIAL IN ACCORDANCE WITH S&WB DWG. NO. D-870.

V. HOUSE CONNECTIONS

1. HOUSE CONNECTIONS SHALL BE INSTALLED USING 6 IN. SOLID WALL SDR 26 PVC PIPE EXTENDED TO THE

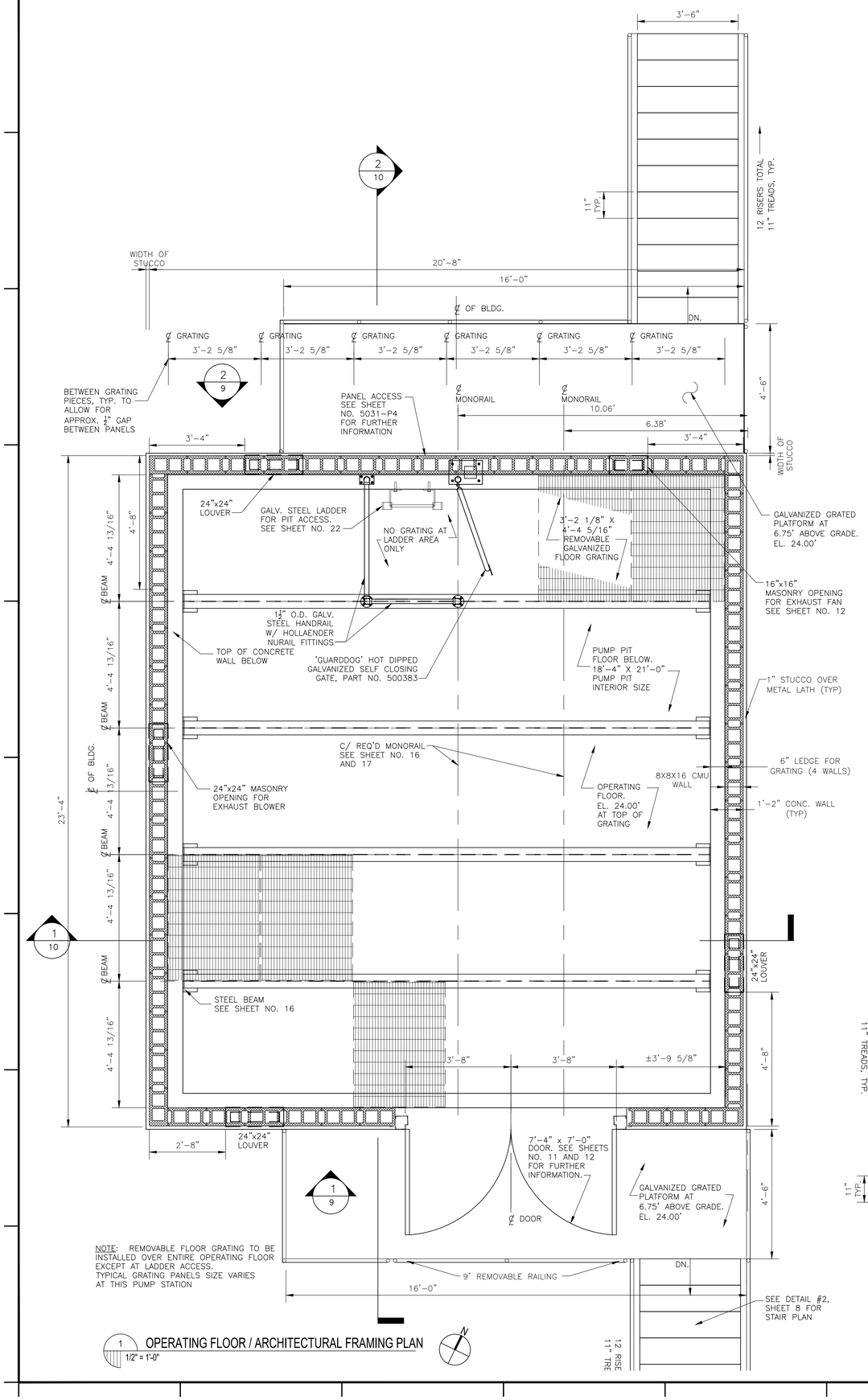

1 OPERATING FLOOR / ARCHITECTURAL FRAMING PLAN
1/2" = 1'-0"

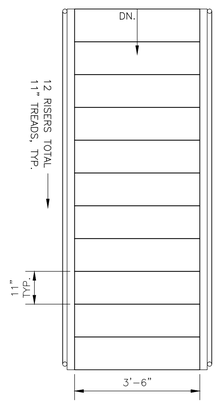

2 STAIR PLAN
1/2" = 1'-0"

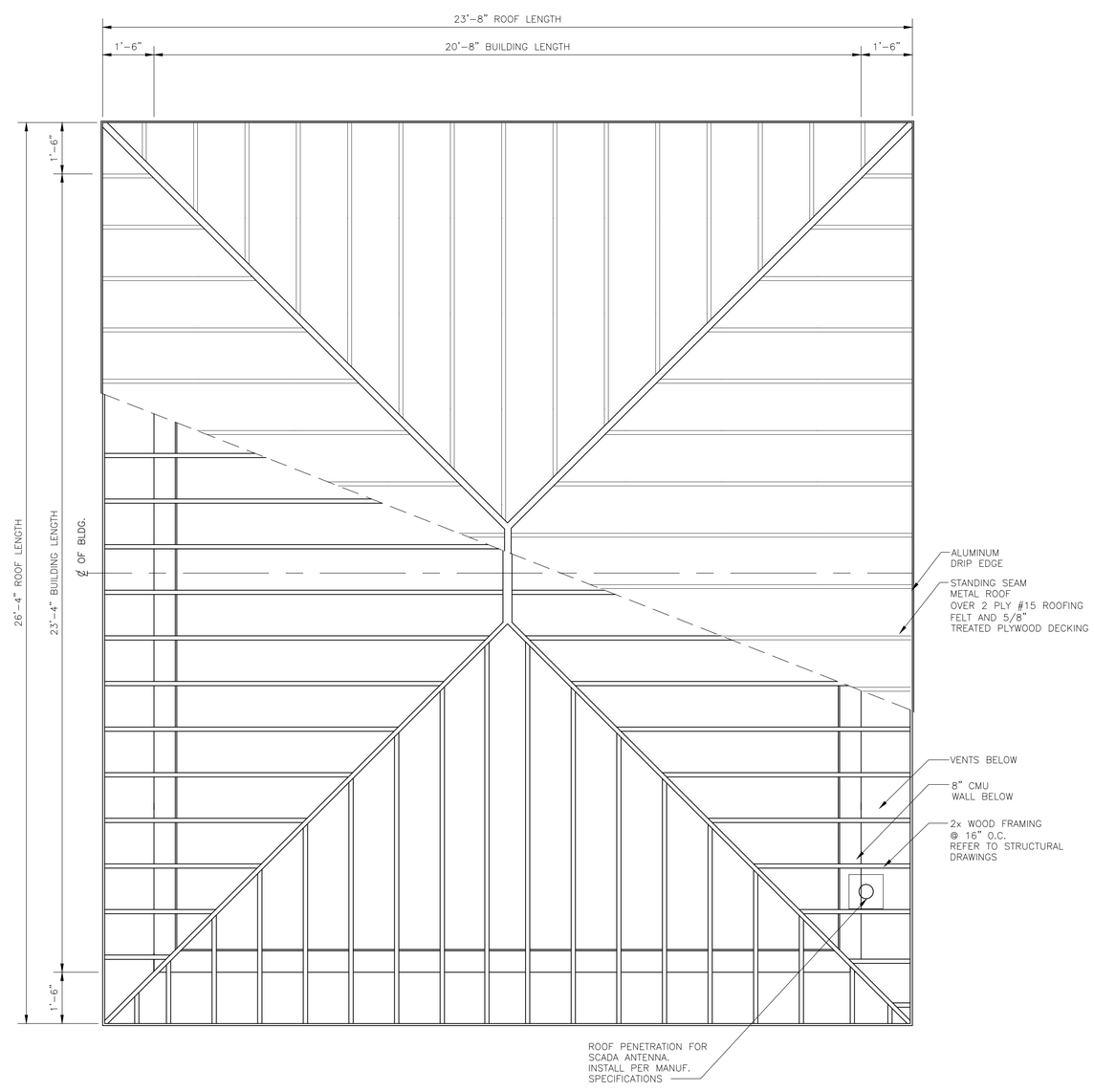

3 COMBINED ROOF AND FRAMING PLAN
1/2" = 1'-0"

ARCHITECTURAL

REV.	DATE	DESCRIPTION	BY

SEWERAGE AND WATER BOARD OF NEW ORLEANS

CONTRACT 3669
HURRICANE KATRINA RELATED
404 HAZARD MITIGATION GRANT PROGRAM
REPLACEMENT OF SEWAGE LIFT STATION NO. 6

FLOOR FRAMING AND ROOF PLANS

DR. JW
TRC. ----
CK. DW
AP. DW
SCALE: AS NOTED
DATE: JUNE 2011

GENERAL SUPERINTENDENT

DWG. No. 12040-W-63

SET NO.
SHEET NO. 8

PRINTED Aug 08, 2013 - 1:55pm FILENAME - J:\6005.1-GOSHEP-2013\Contract 3669 - SPS No. 6\ARCHITECTURAL\SHT 8_NO 6_ARCH FRAME.dwg

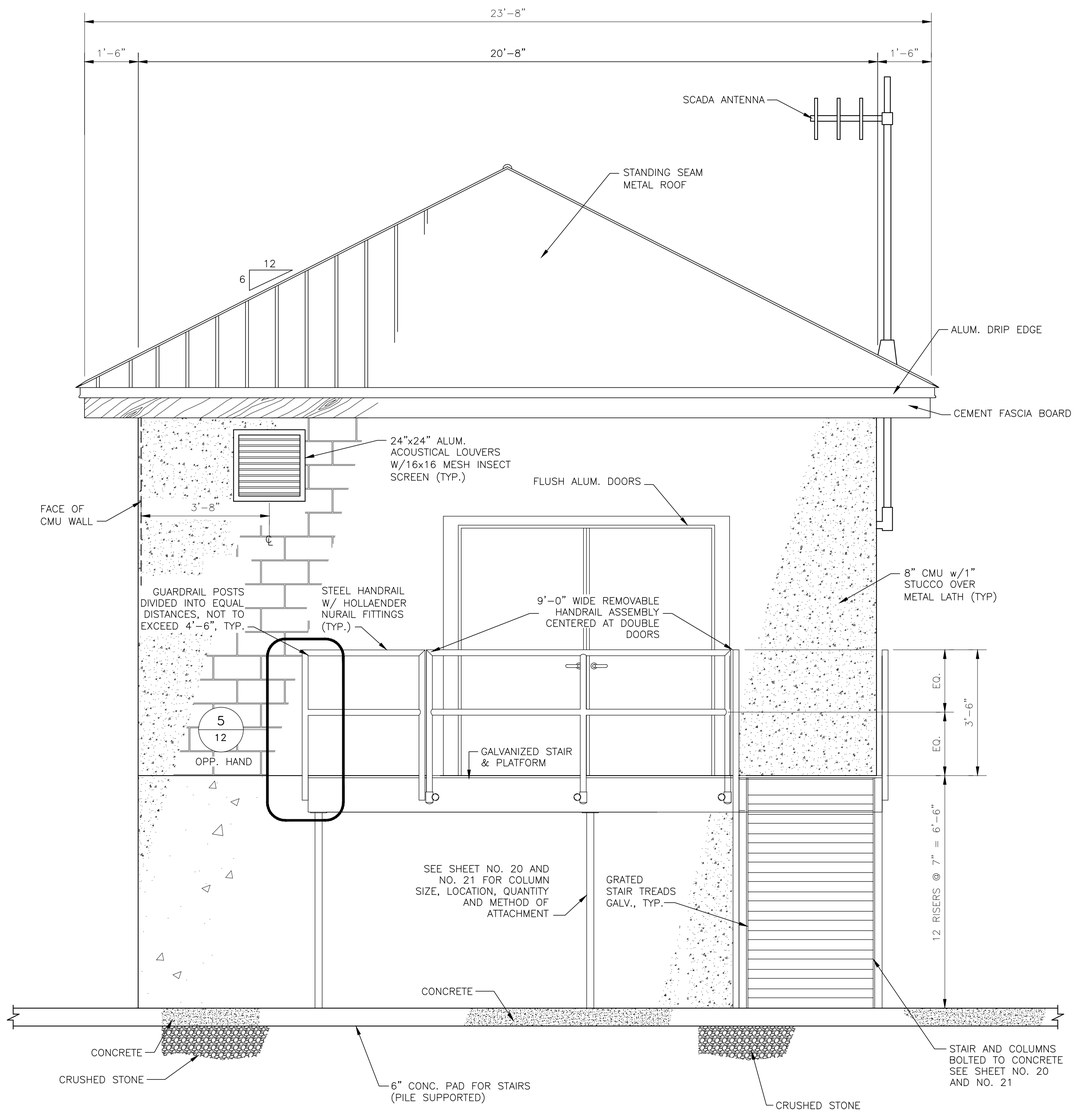

1 SOUTH ELEVATION
1/2" = 1'-0"

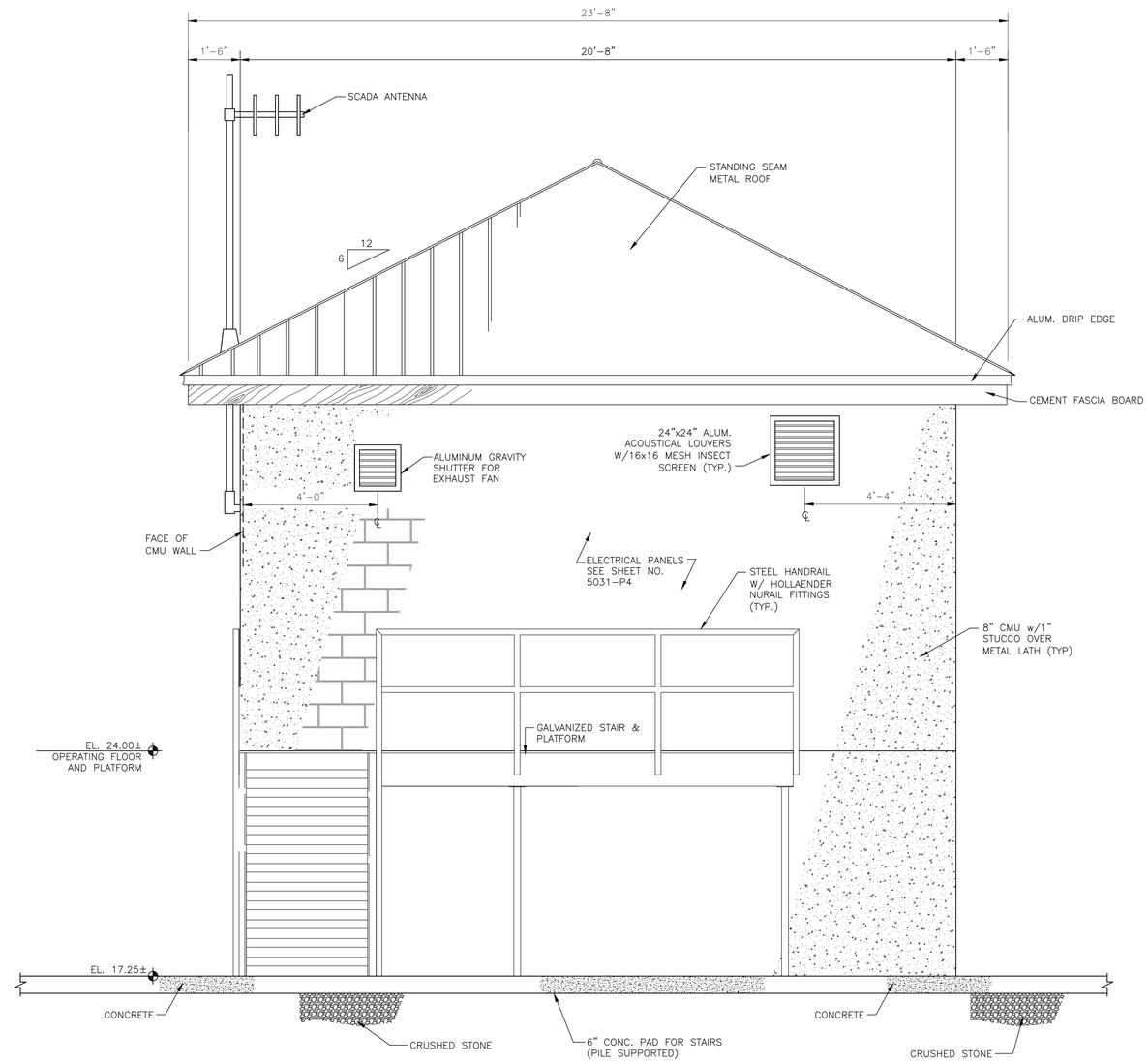

2 NORTH ELEVATION
1/2" = 1'-0"

ARCHITECTURAL **Perez.**

REV.	DATE	DESCRIPTION	BY

SEWERAGE AND WATER BOARD OF NEW ORLEANS

CONTRACT 3669
HURRICANE KATRINA RELATED
404 HAZARD MITIGATION GRANT PROGRAM
REPLACEMENT OF SEWAGE LIFT STATION NO. 6

BUILDING ELEVATIONS

DESIGN ENGINEERING INC.
3330 West Esplanade Ave. S.
Suite 205
Metairie, LA 70002
(504) 836-2155

DR. JW
TRC. ----
CK. DW
AP. DW
SCALE: AS NOTED
DATE: MARCH 2013

GENERAL SUPERINTENDENT

DWG. No. 12040-W-63

SET NO. | SHEET NO. 9

PRINTED Aug 08, 2013 - 1:56pm FILENAME - J:\6005.1-GOSHEP-2013\Contract 3669 - SPS No. 6\ARCHITECTURAL\SHT 9_NO 6_BLDG EL.dwg

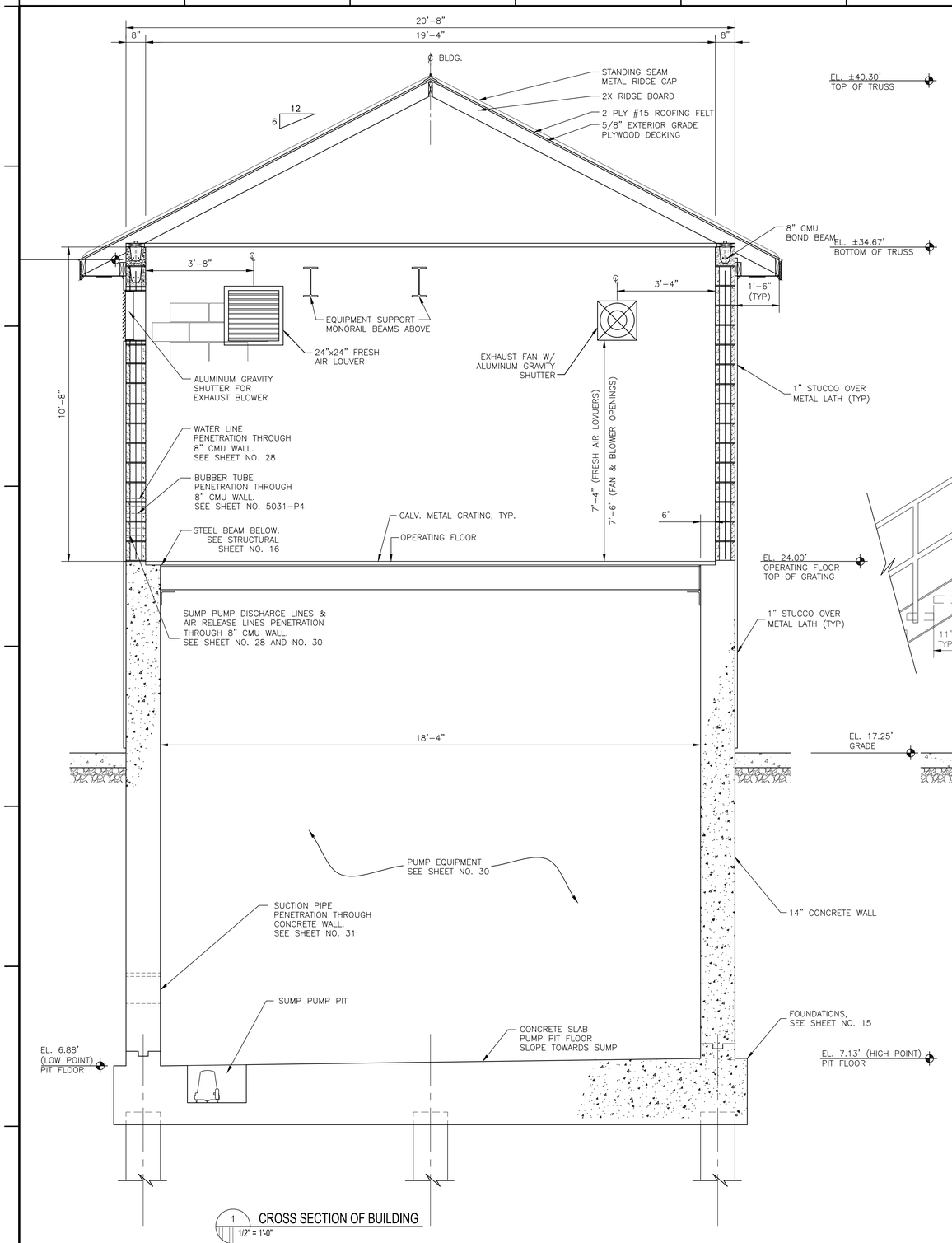

1 CROSS SECTION OF BUILDING
1/2" = 1'-0"

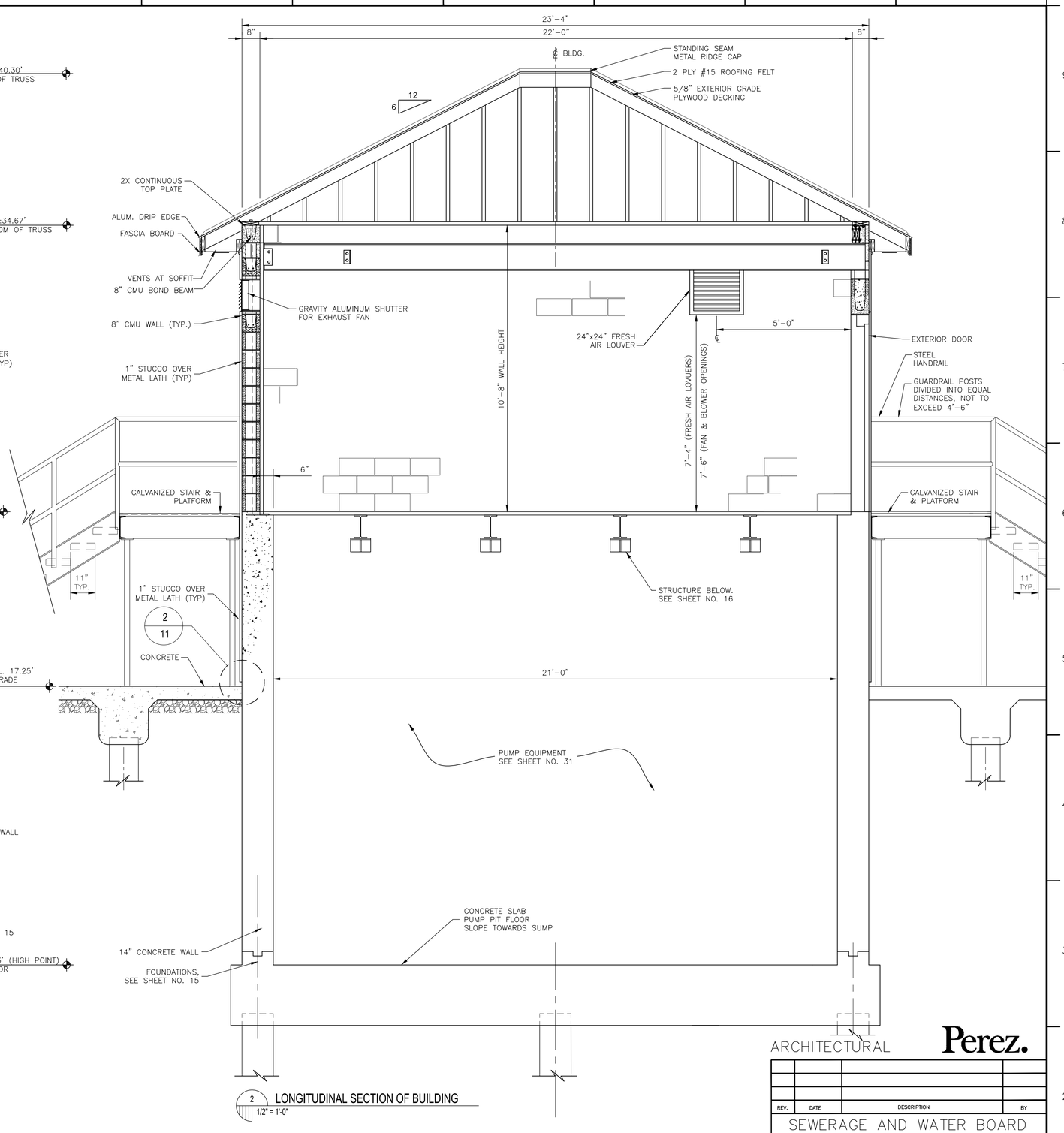

2 LONGITUDINAL SECTION OF BUILDING
1/2" = 1'-0"

ARCHITECTURAL

Perez.

REV.	DATE	DESCRIPTION	BY

SEWERAGE AND WATER BOARD OF NEW ORLEANS

CONTRACT 3669
HURRICANE KATRINA RELATED
404 HAZARD MITIGATION GRANT PROGRAM
REPLACEMENT OF SEWAGE LIFT STATION NO. 6

BUILDING SECTIONS

DR. JW
TRC. ----
CK. DW
AP. DW
SCALE: AS NOTED
DATE: MARCH 2013

GENERAL SUPERINTENDENT

DWG. No. 12040-W-63

SET NO.

SHEET NO. 10

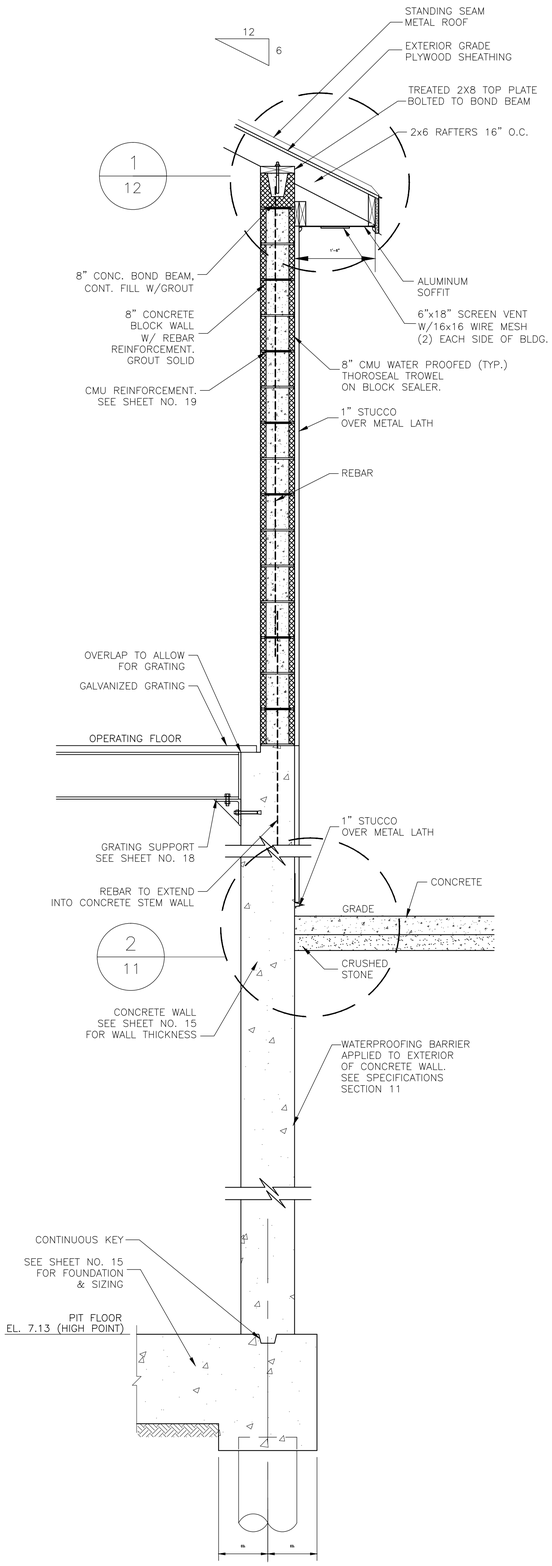

1 TYPICAL ROOF AND WALL DETAIL
1/4" = 1'

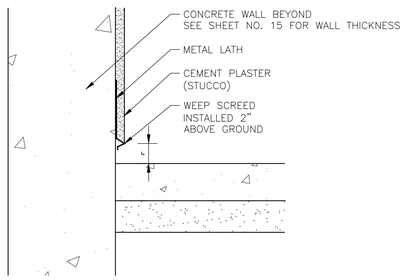

2 STUCCO BASE DETAIL
1 1/2" = 1'

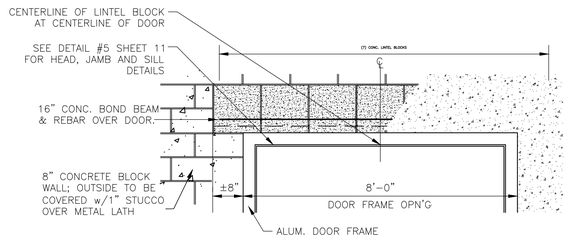

3 DOOR FRAME AND LINTEL DETAIL
1/2" = 1'

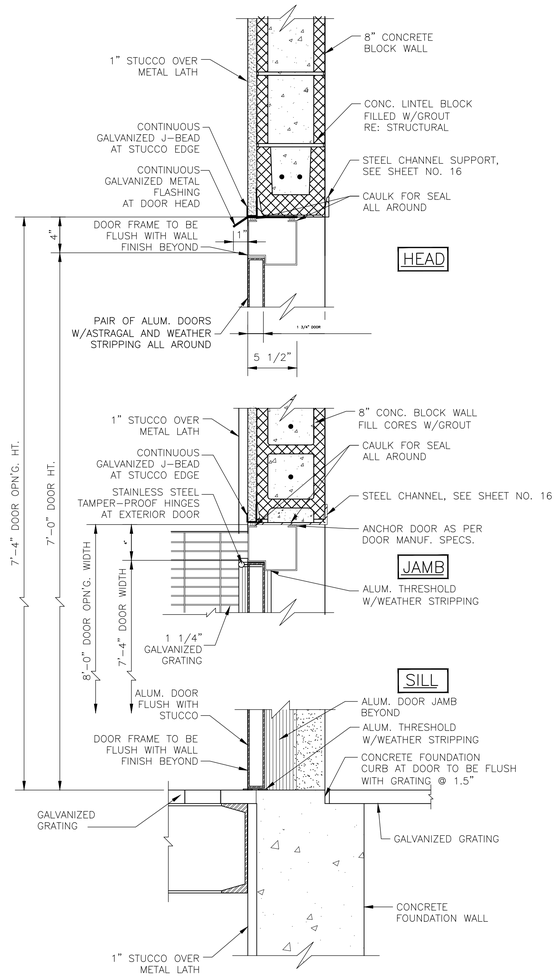

5 TYPICAL DOOR FRAME DETAIL
1 1/2" = 1'

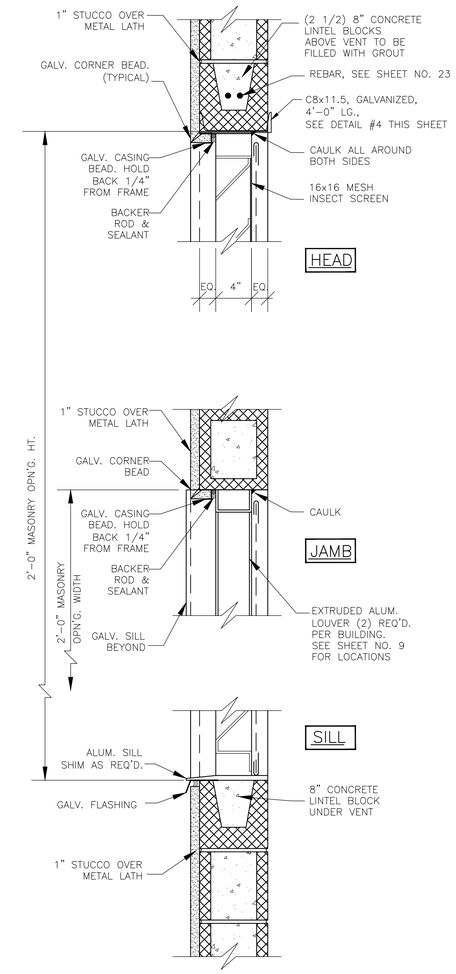

6 LOUVER DETAIL
1 1/2" = 1'

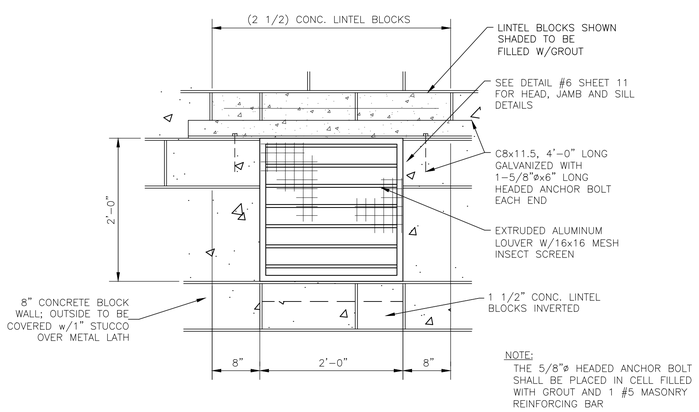

NOTE:
THE 5/8"ø HEADED ANCHOR BOLT SHALL BE PLACED IN CELL FILLED WITH GROUT AND 1 #5 MASONRY REINFORCING BAR

4 ENLARGED LOUVER ELEVATION
1" = 1'

ARCHITECTURAL

REV.	DATE	DESCRIPTION	BY

SEWERAGE AND WATER BOARD OF NEW ORLEANS

CONTRACT 3669
HURRICANE KATRINA RELATED
404 HAZARD MITIGATION GRANT PROGRAM
REPLACEMENT OF SEWAGE LIFT STATION NO. 6

ARCHITECTURAL DETAILS

DR. JW
TRC. ----
CK. DW
AP. DW
SCALE: AS NOTED
DATE: JUNE 2011

GENERAL SUPERINTENDENT

DWG. No. 12040-W-63

SET NO.
SHEET NO. 11

PRINTED Aug 08, 2013 - 1:57pm FILENAME - J:\6005.1-GOSHEP-2013\Contract 3669 - SPS No. 6\ARCHITECTURAL\SHT 11_NO 6_ARCH DET1.dwg

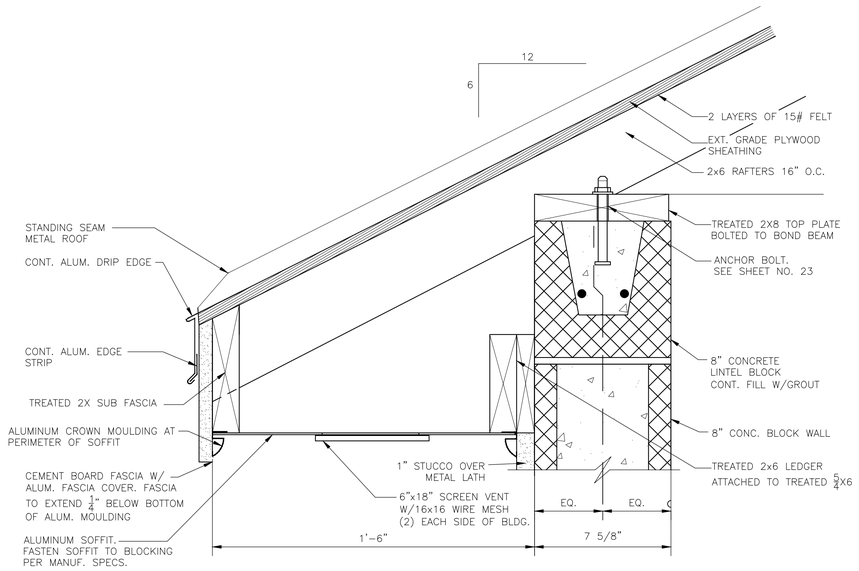

1 STANDING SEAM METAL ROOF SOFFIT DETAIL
3" = 1'

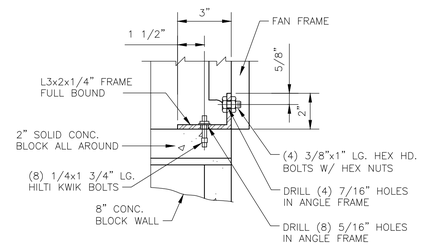

2 FAN CONNECTION DETAIL
3"=1'

NOTE:
HOT DIP GALVANIZE ANGLE FRAME AFTER FABRICATION

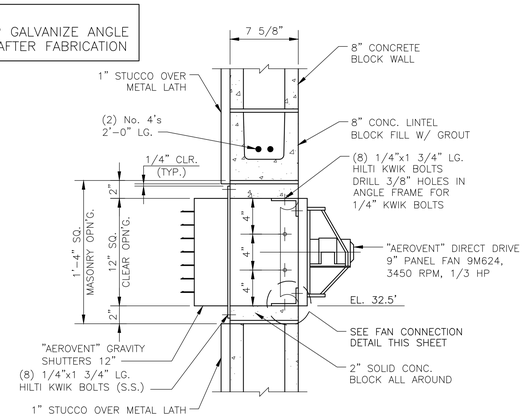

3 EXHAUST FAN AND SHUTTER DETAIL
1 1/2" = 1'

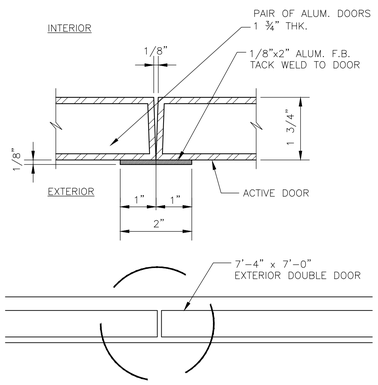

4 ASTRAGAL DETAIL
6" = 1'

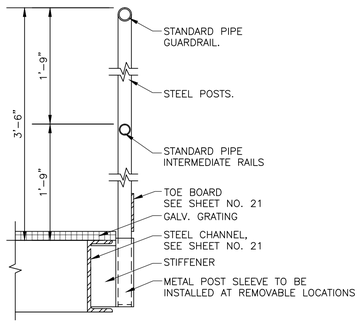

NOTE: SEE STRUCTURAL DETAILS, SHEET 21, FOR MORE INFORMATION

5 TYPICAL GUARDRAIL DETAIL
1 1/2" = 1'

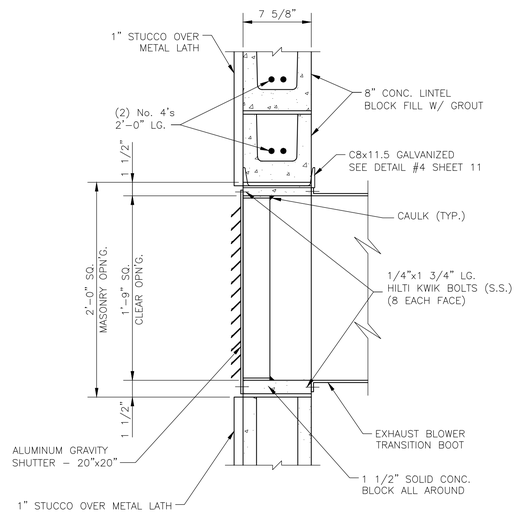

6 EXHAUST BLOWER AND SHUTTER DETAIL
1 1/2" = 1'

ARCHITECTURAL

REV.	DATE	DESCRIPTION	BY

SEWERAGE AND WATER BOARD OF NEW ORLEANS

CONTRACT 3669
HURRICANE KATRINA RELATED
404 HAZARD MITIGATION GRANT PROGRAM
REPLACEMENT OF SEWAGE LIFT STATION NO. 6

ARCHITECTURAL DETAILS

DR. JW
TRC. ----
CK. DW
AP. DW
SCALE: AS NOTED
DATE: JUNE 2011

GENERAL SUPERINTENDENT

DWG. No. 12040-W-63

SET NO.
SHEET NO. 12

PRINTED Aug 08, 2013 – 1:58pm FILENAME – J:\6005.1-GOSHEP-2013\Contract 3669 – SPS No. 6\ARCHITECTURAL\SHT 12_NO 6_ARCH DET2.dwg

EUSTIS ENGINEERING COMPANY, INC.

LOG OF BORING AND TEST RESULTS

SEWERAGE & WATER BOARD OF NEW ORLEANS
WASTEWATER REHABILITATION PROGRAM
DESIGN PACKAGE NO. 4
NEW ORLEANS, LOUISIANA

(Sheet 1 of 2)

Ground Elev.: **Datum:** **Gr. Water Depth:** See Text **Job No.:** 20701 **Date Drilled:** 8/19-21/09 **Boring:** 6

Refer to "Legends & Notes"

Scale In Feet	PP	SPT	SPLR	Symbol	Visual Classification	USC	Sample Number	Depth In Feet	Water Content Percent	Density Dry	Density Wet	Shear Tests Type	Shear Tests ø	Shear Tests C	Atterberg Limits LL	Atterberg Limits PL	Atterberg Limits PI		Other Tests
0					Grayish-tan organic clay w/roots & gravel	OH	1	0-0.5											
	1.00				Loose gray sand w/gravel	SP	2	2-3	32										
8	0.50				Medium stiff brown clay w/gravel & organic matter	CH	3	5-6	52										
	0.50				Extremely soft to soft dark gray clay w/organic matter & roots	CH	4	8-9	82	54	98	UC	--	215					
10							5	11-12	128	39	88	UC	--	104	142	37	105		
							6	14-15	168	31	84	UC	--	353					
					Very soft to soft dark gray clay w/silt & sandy silt layers	CH													
20							7	19-20	56	71	110	UC	--	199	55	22	33		
7							8	23-24	56	70	109	UC	--	328					
					Very soft to soft gray clay	CH													
30							9	28-29											
							10	33-34	77	56	99	UC	--	408					
					Very soft dark gray clay w/silty sand layers	CH													
40							11	38-39	62	64	104	UC	--	159					
6					Very loose gray sand w/shells	SP	12	43-44	29										
	0.50				Very soft dark gray clay w/silty sand pockets & shell fragments	CH	13	48-49	50	74	110	UC	--	200					
50																			

Comments: Latitude: 29° 58.436' N
Longitude: 90° 06.211' W
Sewage Pump Station #6

EUSTIS ENGINEERING COMPANY, INC.

LOG OF BORING AND TEST RESULTS

SEWERAGE & WATER BOARD OF NEW ORLEANS
WASTEWATER REHABILITATION PROGRAM
DESIGN PACKAGE NO. 4
NEW ORLEANS, LOUISIANA

(Sheet 2 of 2)

Ground Elev.: **Datum:** **Gr. Water Depth:** See Text **Job No.:** 20701 **Date Drilled:** 8/19-21/09 **Boring:** 6

Refer to "Legends & Notes"

Scale In Feet	PP	SPT	SPLR	Symbol	Visual Classification	USC	Sample Number	Depth In Feet	Water Content Percent	Density Dry	Density Wet	Shear Tests Type	Shear Tests ø	Shear Tests C	Atterberg Limits LL	Atterberg Limits PL	Atterberg Limits PI		Other Tests
50					Very soft dark gray clay w/silty sand pockets & shell fragments	CH													
	3.50				Very stiff greenish-gray & tan clay w/silty sand lenses & concretions	CH	14	53-54	18	115	135	UC	--	3308					
	2.50				w/silt pockets		15	58-59											
60																			
	3.00						16	63-64	29	95	123	UC	--	2299					
3																			
	2.50						17	68-69											
70																			
					Stiff greenish-gray clay w/sandy silt lenses	CH													
	1.50						18	73-74	29	95	123	UC	--	1150					
					Loose gray clayey silt	ML													
80							19	78-79	32										
					Loose to medium dense gray clayey sand w/clay layers	SC													
2							20	83-84	25	102	128	OB	0	2766					
90	1.50				Loose to medium compact gray silt	ML	21	89-90	23										
							22	93-94	25										
		15			Stiff gray sandy clay	CL													
100							23	98.5-100	41										

Comments: Latitude: 29° 58.436' N
Longitude: 90° 06.211' W
Sewage Pump Station #6

LEGEND AND NOTES FOR LOG OF BORING AND TEST RESULTS

PP — Pocket penetrometer: Resistance in tons per square foot

SPT — Standard Penetration Test: Number of blows of a 140-lb hammer dropped 30 inches required to drive 2-in. O.D., 1.4-in. I.D. sampler a distance of 1 foot into the soil after first seating it 6 inches

SPLR — Type of Sampling: Shelby, SPT, Auger, No sample

SYMBOL — Clay, Silt, Sand, Peat/Humus, Shells, Stone/Gravel

Predominant type shown heavy; Modifying type shown light

USC — Unified Soil Classification

DENSITY — Unit weight in pounds per cubic foot

SHEAR TESTS

TYPE

- UC — Unconfined compression shear
- OB — Unconsolidated undrained triaxial compression shear on one specimen confined at the approximate overburden pressure
- UU — Unconsolidated undrained triaxial compression shear
- CU — Consolidated undrained triaxial compression shear
- DS — Direct shear

Ø — Angle of internal friction in degrees
c — Cohesion in pounds per square foot

ATTERBERG LIMITS

- LL — Liquid Limit
- PL — Plastic Limit
- PI — Plasticity Index

OTHER TESTS

- CON — Consolidation
- PD — Particle size distribution (sieve and/or hydrometer)
- k — Coefficient of permeability in centimeters per second
- SP — Swelling pressure in pounds per square foot

Other laboratory test results reported on separate figures

GENERAL NOTES

(1) If a ground water depth is shown on the boring log, these observations were made at the time of drilling and were measured below the existing ground surface. These observations are shown on the boring logs. However, ground water levels may vary due to seasonal fluctuations and other factors. If important to construction, the depth to ground water should be determined by those persons responsible for construction immediately prior to beginning work.

(2) While the individual logs of borings are considered to be representative of subsurface conditions at their respective locations on the dates shown, it is not warranted that they are representative of subsurface conditions at other locations and times.

STRUCTURAL

REV.	DATE	DESCRIPTION	BY

SEWERAGE AND WATER BOARD OF NEW ORLEANS

CONTRACTS 3669
HURRICANE KATRINA RELATED
404 HAZARD MITIGATION GRANT PROGRAM
REPLACEMENT OF SEWAGE LIFT STATION NO. 6

BORING LOGS

DESIGN ENGINEERING INC.
3330 West Esplanade Ave. S.
Suite 205
Metairie, LA 70002
(504) 836-2155

DR. LN
TRC. ---
CK. MS/AR
AP. JH
SCALE: AS SHOWN
DATE: JANUARY 2012

GENERAL SUPERINTENDENT

DWG. No. 12040-W-63

SET NO.

SHEET NO. 13

PRINTED Aug 08, 2013 – 1:59pm FILENAME – J:\6005.1-GOSHEP-2013\Contract 3669 – SPS No. 6\SHT 13_NO 6_BORING.dwg