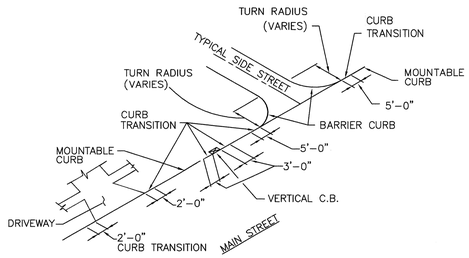

LOCATIONS OF CURB TRANSITION

N.T.S.

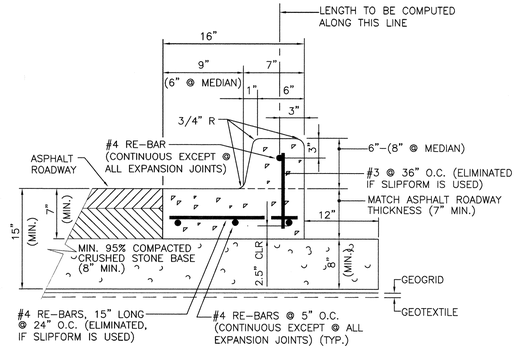

BARRIER CURB & GUTTERBOTTOM

N.T.S.

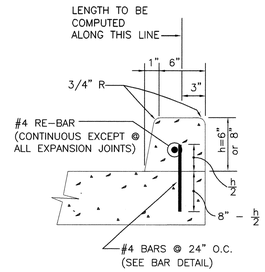

DOWELED BARRIER CURB

N.T.S.

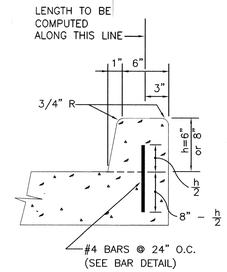

INTEGRAL BARRIER CURB

N.T.S.

NOTES:

(1) ALL CONCRETE GUTTERBOTTOM AND CURBS TO BE 4000 PSI EXCEPT AS OTHERWISE INDICATED.

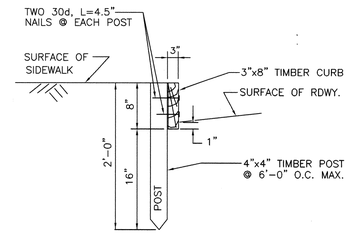

NOTE:

TIMBER TO BE CREOSOTE TREATED NO. 1 COMMON PINE (12 LbS./Cf.) OR CCA TREATED NO. 1 COMMON PINE (0.6 Lb./Cf.).

TYPICAL SECTION OF TIMBER CURB

N.T.S.

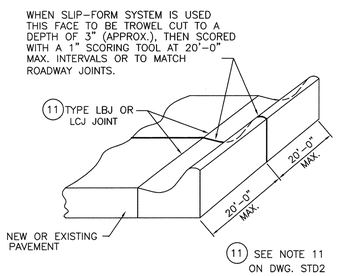

DETAIL SHOWING JOINTS IN CONCRETE CURB AND GUTTER

N.T.S.

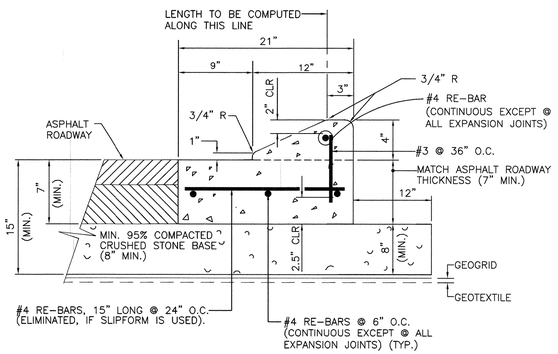

MOUNTABLE CURB & GUTTERBOTTOM

N.T.S.

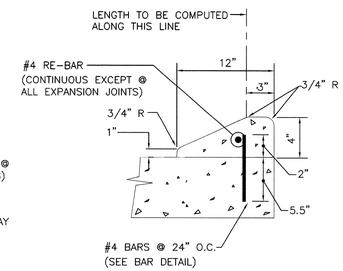

DOWELED MOUNTABLE CURB

N.T.S.

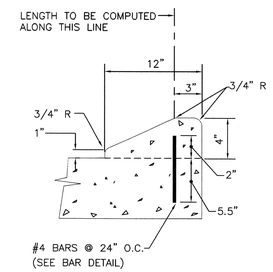

INTEGRAL MOUNTABLE CURB

N.T.S.

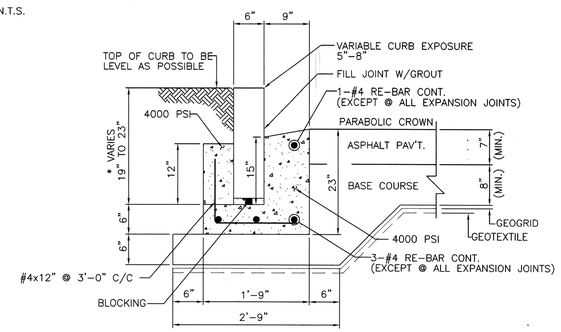

TYPICAL GRANITE BLOCK CURBING

*APPROX. 19" TO 23" (ASSUME EXIST. GRANITE CURB IS 19" HIGH)

N.T.S.

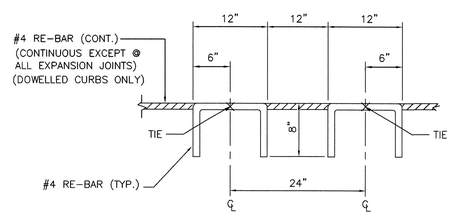

BAR DETAIL

SHOWING DIMENSIONS AND SPACING OF #4 DEF. REINF. STEEL BARS FOR CONC. CURB

N.T.S.

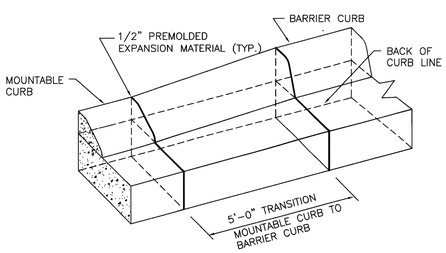

MOUNTABLE-BARRIER CURB TRANSITION

N. T. S.

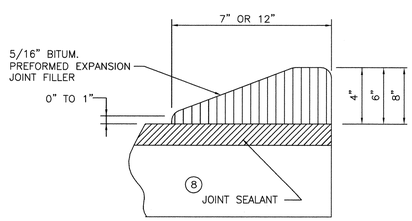

(8) SEE NOTE 8 ON DWG STD2

NOTE:

WHEN CURB IS POURED MONOLITHICALLY WITH PAVEMENT, THE BITUMINOUS PRE-FORMED EXPANSION JOINT FILLER SHALL EXTEND TO BOTTOM OF JOINT INSERT.

JOINT FILLER DETAIL FOR INTEGRAL CONCRETE CURB (MOUNTABLE OR BARRIER TYPE)

(MOUNTABLE CURB IS SHOWN)

N.T.S.

THE SELECTION AND USE OF THESE DETAILS, WHILE DESIGNED IN ACCORDANCE WITH GENERALLY ACCEPTED ENGINEERING PRINCIPLES AND PRACTICES, IS THE SOLE RESPONSIBILITY OF THE USER AND SHOULD NOT BE USED WITHOUT CONSULTING A LOUISIANA REGISTERED PROFESSIONAL ENGINEER.

CITY OF NEW ORLEANS
DEPARTMENT OF PUBLIC WORKS
ENGINEERING DIVISION

GUTTERBOTTOM & CURB FOR STREET CONSTRUCTION

DRAWN BY:	REVIEWED BY:	RECOMMENDED BY:
R. FERGUSON	M.T. B.V. R.S. R.H. A.Y.	NGUYEN D. PHAN, CHIEF ENGINEER
DATE: 12-16-2009	SCALE: AS NOTED	APPROVED: ROBERT C. MENDOZA, DIRECTOR 12-16-09

DRAWING No.

STD4