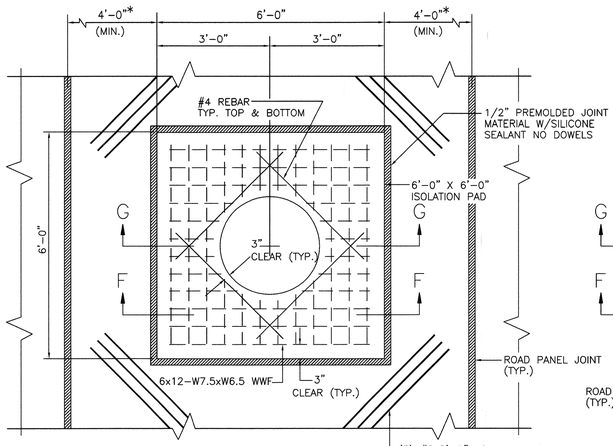

* ISOLATION PAD MUST HAVE A MINIMUM OF 4'-0" FROM ISOLATION PAD TO ROAD PANEL JOINT.

MAN-HOLE CASE (1)

N.T.S.

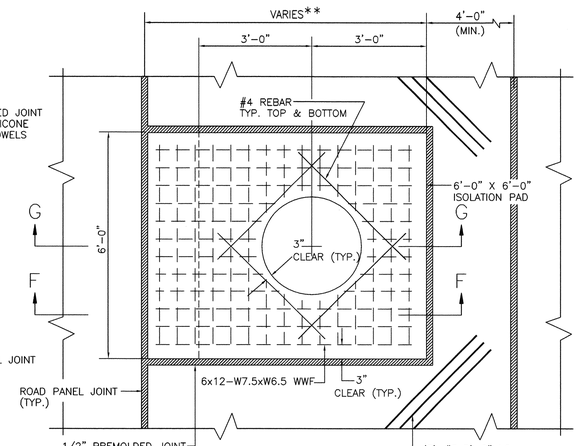

** IF ISOLATION PAD FALLS LESS THAN 4'-0" FROM ROAD PANEL JOINT INCREASE ISOLATION PAD LENGTH AS REQUIRED TO COMBINE THE JOINTS

MAN-HOLE CASE (2)

N.T.S.

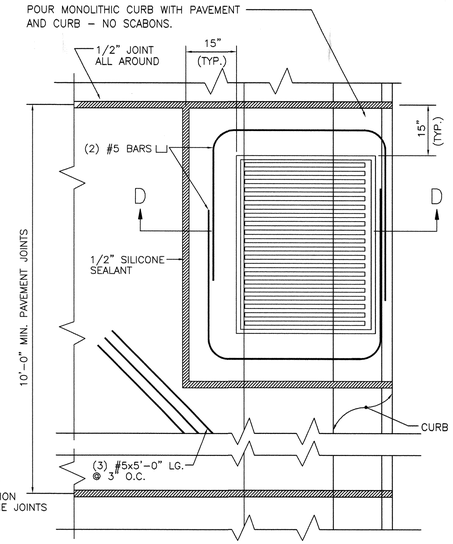

ROLL-OVER CATCH BASIN PLACEMENT CASE (1)

N.T.S.

(SEE DRAWING STD2)

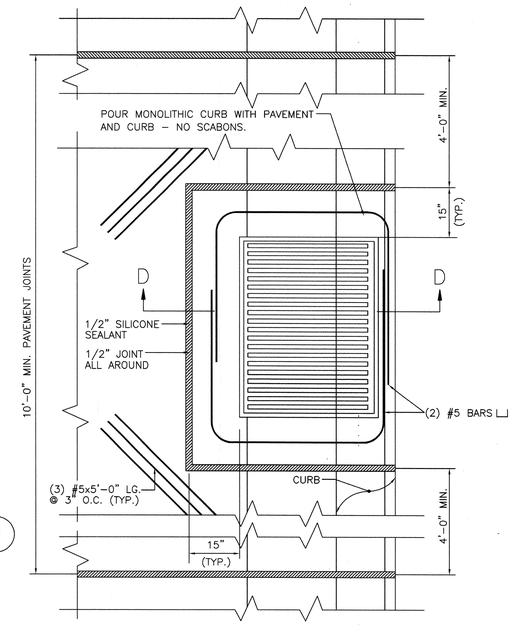

ROLL-OVER CATCH BASIN PLACEMENT CASE (2)

N.T.S.

(SEE DRAWING STD2)

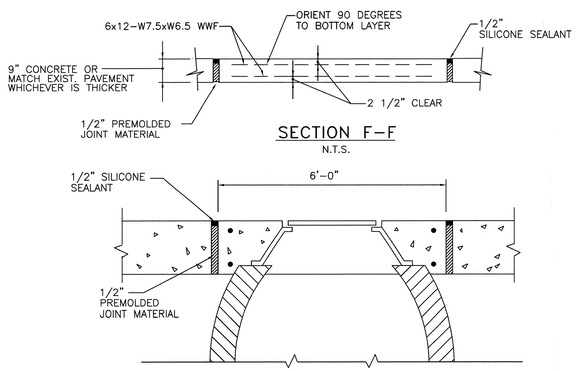

SECTION F-F

N.T.S.

SECTION G-G

MANHOLE ISOLATION PAD

N.T.S.

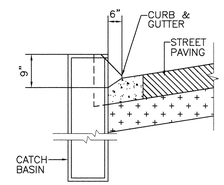

SECTION C-C

N.T.S.

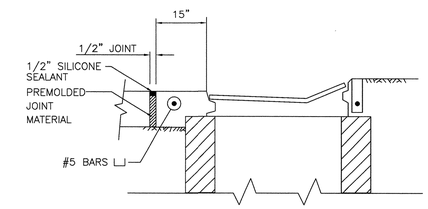

SECTION D-D

JOINT DETAIL AT ROLL-OVER BASIN

N.T.S.

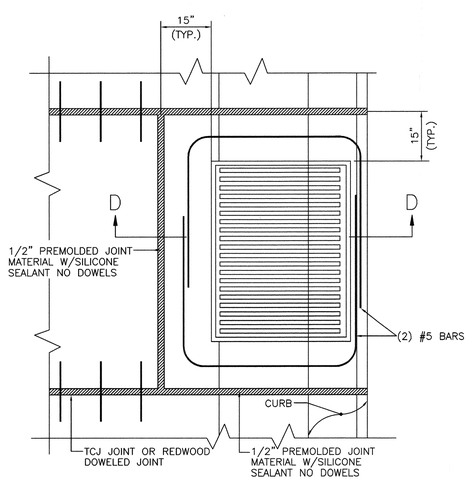

ROLL-OVER CATCH BASIN PLACEMENT CASE (3)

N.T.S.

(SEE DRAWING STD2)

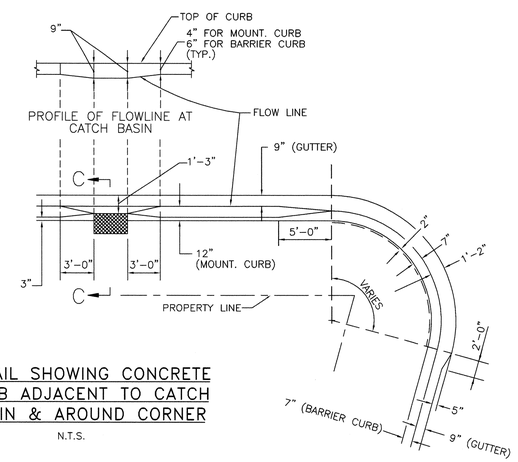

DETAIL SHOWING CONCRETE CURB ADJACENT TO CATCH BASIN & AROUND CORNER

N.T.S.

NOTES:

1.) EACH UTILITY STRUCTURE WITHIN THE ROADWAY SHALL HAVE IT'S ISOLATION PAD.

THE SELECTION AND USE OF THESE DETAILS, WHILE DESIGNED IN ACCORDANCE WITH GENERALLY ACCEPTED ENGINEERING PRINCIPLES AND PRACTICES, IS THE SOLE RESPONSIBILITY OF THE USER AND SHOULD NOT BE USED WITHOUT CONSULTING A LOUISIANA REGISTERED PROFESSIONAL ENGINEER.

CITY OF NEW ORLEANS
DEPARTMENT OF PUBLIC WORKS
ENGINEERING DIVISION

MISCELLANEOUS DETAILS FOR CATCH BASIN, MANHOLE & UTILITIES INSTALLATION

DRAWN BY:	REVIEWED BY:		RECOMMENDED BY:
R. FERGUSON	M.T. B.V. R.S. R.H. A.Y.		NGUYEN D. PHAN, CHIEF ENGINEER
DATE: 12-16-2009	SCALE AS NOTED	APPROVED	ROBERT C. MENDOZA, DIRECTOR

DRAWING No.

STD9