CITY OF NEW ORLEANS

Historic District Landmarks Commission

Guidelines for Storm Preparedness & Resilience

Storm Preparedness and Resilience

The City of New Orleans is vulnerable to severe storm events that may include flood waters and high winds, often associated with hurricanes. In balancing the need for property protection with the potential impact on historic integrity, the following functional and aesthetic concerns should be evaluated when considering storm preparedness and resilience options:

- Regular maintenance and basic improvements can lessen storm effects
- Basic improvements, such as elevating building systems and equipment, can facilitate recovery and prevent the need for costly replacement

Section Index

The HDLC reviews all permanent, publicly visible storm preparedness modifications and features including:

- Building Maintenance; Roof System Protection – Page 13-2
- Window and Door Protection – Page 13-3
- Structural Vulnerability – Page 13-4
- Porch, Gallery and Balcony Protection – Page 13-5
- Building Elevation – Page 13-6
- Elevating Building Systems and Equipment – Page 13-7

HDLC review is not required for any temporary measures implemented immediately prior to a storm.

All applicants must obtain a Certificate of Appropriateness (CofA) as well as all necessary permits prior to proceeding with any work. Please review this information during the early stages of planning your project. Familiarity with this material can assist in moving a project quickly through the approval process, saving applicants both time and money. Staff review of all details is required to ensure proposed work is appropriate to the specific property.

Additional *Guidelines* addressing other historic building topics are available at the HDLC office and on its web site at www.nola.gov. For more information, to clarify whether a proposed project requires Historic District Landmarks Commission (HDLC) review, to obtain property ratings or permit applications, please call the HDLC at (504) 658-7040.

Using These *Guidelines*

The first step in using these Guidelines is to understand the rating. The rating corresponds to the historical and/or architectural significance of properties and determines what will be permitted within local Historic Districts or at local Landmarks under the jurisdiction of the HDLC.

S *Significant Properties – Retain the highest degree of architectural and historical merit.*

C *Contributing Properties – Contribute to the overall District and city character.*

N *Non-Contributing Properties – Do not contribute to the overall District character.*

Building Maintenance

In many ways, a well-maintained property can provide the best investment to reduce the potential damage from hazards such as flooding and hurricane-strength winds. All materials deteriorate over time, but without regular repair, deterioration will accelerate. Maintenance can slow natural deterioration and reduce potential risks associated with flood and wind hazards, helping to protect historic properties, and, more importantly, human life. Examples of simple maintenance that reduce the vulnerability of historic properties to natural hazards include:

- Grading land to drain away from buildings
- Trimming overhanging tree limbs that might crash through a roof or take down electric and telephone lines
- Clearing site debris that might become waterborne or airborne, clog storm drains, provide fuel for a fire, harbor pests, such as termites, or cause damage to the historic building or surrounding buildings
- Securing outdoor furnishings to prevent them from becoming waterborne or airborne
- Ensuring oil and propane tanks and associated connections are well maintained and anchored to prevent flotation
- Removing clutter and unnecessary storage in a building, particularly if items are hazardous, highly flammable or located in a flood-prone area
- Maintaining roofing, flashing, gutters and downspouts to direct stormwater away from buildings
- Reinforcing roof framing to support wind loads
- Repointing masonry, including chimneys, walls, foundations, and piers, to prevent collapse and stormwater infiltration (refer to *Repointing Historic Masonry, Guidelines for Masonry and Stucco,* page 07-9)
- Replacing or securing missing or dislodged siding to prevent stormwater infiltration and potential windborne debris (refer to *Woodwork Maintenance and Repair, Guidelines for Exterior Woodwork,* page 06-5)
- Replacing cracked window glass that can shatter in a wind storm and allow water infiltration (refer to *Wood Window Repair, Guidelines for Windows and Doors,* page 06-5)
- Maintaining shutters in an operational condition to protect windows from airborne debris in a wind storm
- Replacing cracked pipes to prevent plumbing leaks or sewer failure (refer to *Moisture, Guidelines for Exterior Maintenance,* page 0-14)
- Replacing smoke and carbon monoxide detector batteries

Refer to the *Guidelines for Exterior Maintenance* for a more extensive list of recommended maintenance tasks for properties as well as individual *Guidelines* sections for more detailed information on a specific topic.

Deteriorated roof conditions ay dramatically increase the vulnerability to storm damage of a building.

Roof System Protection

Some of the greatest damage to a building during a major storm, such as a tropical storm or a hurricane, generally occurs as a result of high winds that compromise the roof system by uplift, causing the entire roof to blow off or components such as slate shingles to blow off. Although some preventative measures may be taken to an existing roof system, some improvements cannot be completed unless a new roof is installed or an existing roof is replaced.

Storm preparedness options for a roof include:

- Adding bracing or additional structural elements to roof framing and gable ends – *Consultation with an architect or engineer might be required* (refer to *Structural Vulnerability*, page 13-4)
- Strengthening connections between roof framing elements using hurricane straps, clips, sheathing, attachments, etc. – *Consultation with an architect or engineer might be required* (refer to *Structural Vulnerability*, page 13-4)
- Installing a secondary roofing system such as self-adhered roofing applied to plywood under slate, tile or metal roofing in the event the primary roof is damaged – *Verify material installation requirements for primary roofing*
- Sealing and protecting skylights, monitors, cupolas and roof vents, including gable-end vents, prior to the storm to minimize impact, wind-driven rain and uplift damage
- Repointing chimneys and securing tile roofing, ridge tiles, cresting and finials with mortar
- Installing metal roofing and flashing with double-lock seams and edges and closely spaced, high-strength fasteners
- Fastening gutters and downspouts securely to the building
- Avoiding use of gravel or other loose materials on a rooftop that could become airborne during a storm
- Reviewing the underside of a roof from the attic for signs of moisture or daylight indicating a potential crack or hole, paying particular attention at roof penetrations such as a chimney (Refer to *Interior Checklist, Guidelines for Exterior Maintenance,* page 03-13)

Fastening shutters and blinds provides protection from hurricanes and additional security.

Window and Door Protection

For many homes in New Orleans, one of the most traditional forms of hurricane protection is shutters or blinds. Additional protection can be obtained by fastening pre-fitted plywood panels onto closed shutters. These forms of protection allow historic windows to remain in place, retaining the historic character of building.

When new buildings are constructed, the *International Building Code* and *Residential Code* requires hurricane protection for windows. A historic building might not be required to meet the same stringent requirements. Hurricane-rated windows and doors can provide additional protection; however, they do not necessarily prevent a window or door from breaking during a storm or preventing the building's interior from being damaged. Hurricane resistant windows and doors tend to have very wide frames and muntins and shallow profiles that do not match historic proportions and are not appropriate for a historic building.

Another hurricane protection option is fabric storm panels that can protect windows and doors from flying debris in the event of a storm. Fasteners can be pre-installed in locations that are minimally visible and painted to match the adjacent surface. Fabric storm panels are lightweight, easy to install and allow light to enter a building in the event of a storm. Another benefit is that they have little to no impact on the historic character of a building if installed only when a storm threatens.

Manufacturers continue to develop new options for hurricane protection. The HDLC encourages innovative solutions that do not require removal of or damage to historic fabric and have minimal physical or visual impact when not in use. However, some shutters developed for storm protection may not be appropriate for use in a historic district due to their design or means of installation. (Refer to *Hurricane Protection, Guidelines for Windows & Doors*, page 08-17.)

Permanently attached plastic storm protection panels are not appropriate for historic buildings.

Discretely placed fasteners can allow fabric storm panels to be installed quickly and are often visually unobtrusive when installed at a secondary building elevation.

Large-Scale Door Protection

A large-scale door, such as those found at a carriageway, stable, garage, fire house or warehouse, is more vulnerable to hurricane-strength winds than a standard door or window because of its size. Damage can occur from high winds or impact from wind-blown debris, which can result in the door twisting off its supports and becoming airborne.

The interior of a historic door can often be modified to be more resistant to the effects of high winds with no visible change at the exterior. In the case of paired carriageway style doors, slidebolts with deep throws can be installed sliding down into the ground and up into the structure of the opening or the transom at each leaf.

Overhead door frames can be retrofitted to include an interior steel track system that is well anchored into the wall that allows the historic door and exterior trim to remain. In addition, steel wind braces can be added to each horizontal panel system to improve the door's rigidity.

Given the importance of understanding all of the conditions associated with storm preparedness for a large-scale door, consultation with an architect or engineer is recommended. He/she can assess the specific circumstances found at a property and provide an appropriate recommendation.

Structural Vulnerability

The biggest cause of damage from a significant storm, such as a hurricane, typically results from high winds, with flooding as the secondary cause. Strong winds can damage a building or structure through:

- Uplifting the structure
- Racking or twisting the building frame
- Sliding or overturning the structure from its foundation
- Creating a void or an opening, such as an opening in a roof, that allows storm water to penetrate the building
- Blowing an element such as a balcony, gallery or porch off of a building, creating a void or opening
- Impacting the building from flying debris

Flooding can damage a building and/or structure through:

- Sliding the structure off of its foundation
- Introducing storm water to building materials leading to rot, mold and/or deterioration

Almost all buildings in New Orleans have wood framing for the roof and floors even if the walls are masonry. Wood-framed portions of a structure are more likely to be damaged by the effects of a significant storm. The connections between wood elements are nailed together with some earlier types of construction including pegged or mortised joints. The movement of a building in high wind tends to loosen connection joints, compromising the structural integrity of a building, which could lead to increased damage from a strong, sustained wind.

Fortunately, there are various connectors, including ties, straps and bolts, that can help protect a structure during a high wind. These connectors are attached directly to the framing under the roofing or sheathing, and work to transfer the load from the top of the roof, through all of the connections, down to the foundation. They are made of galvanized or stainless steel to prevent rusting and require multiple, long nails at each end to be effective.

Fasteners are attached directly to the framing or foundation; therefore, they are easiest to install as part of new construction. However, some connectors have been developed to be installed on an existing structure and should be considered as part of any significant project such as a roof replacement or siding repair.

Because they are concealed within a building's structure, they are not subject to HDLC review, but it is important to consult with an architect or structural engineer to determine the appropriate type, material and size of connectors for each specific building location and condition. In addition, not all contractors are familiar with the installation of hurricane protectors – improper installation can be ineffective and hazardous in the event of a storm.

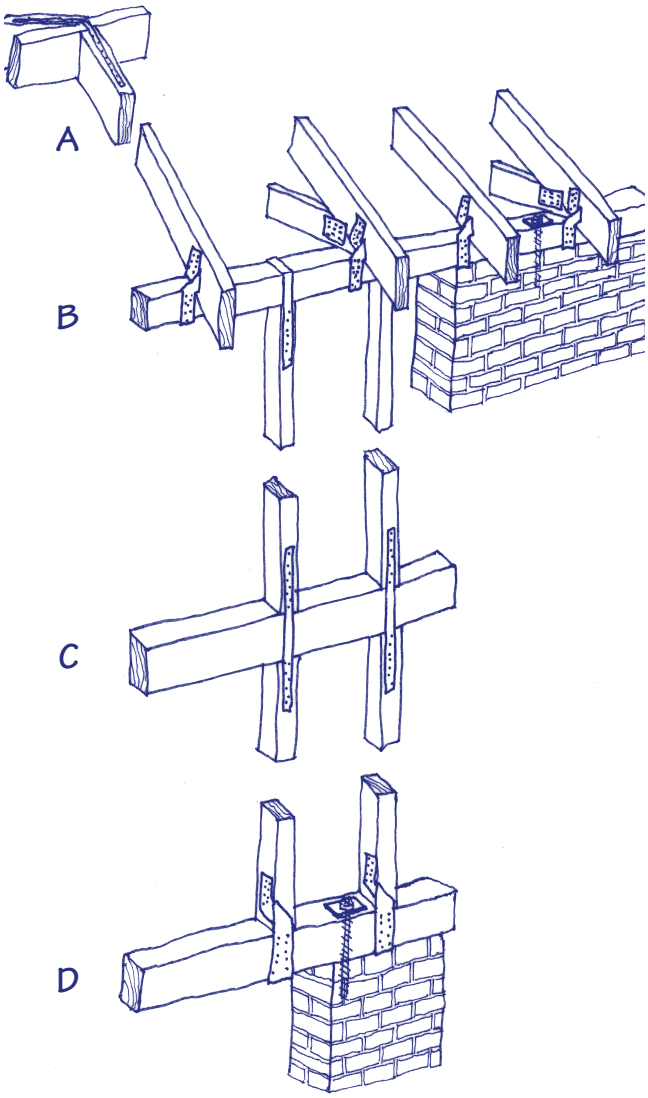

Hurricane connectors are located at the end of each wood framing member to reinforce the structural link from the top of the roof down to the foundation. This creates a continuous vertical load path throughout the wall system. (For clarity, horizontal floor joist connectors have not been shown.)

Connection locations include:

A. *Rafters across a roof ridge*

B. *Rafters to top wall plate and joists; Top wall plate to masonry wall and wall stud*

C. *Wall studs between floors*

D. *Wall studs to sill plate; Sill plate to foundation*

As specific construction assemblies vary, this diagram is for general reference only, and consultation with an architect or engineer is highly recommended. In addition, it is important that masonry walls, foundations and piers are well maintained because wind load and storm water can weaken mortar joints. (Refer to Repointing Historic Masonry, Guidelines for Masonry and Stucco, page 07-9.)

Porch, Gallery and Balcony Protection

Similar to wood framed construction, the failure of a building appendage (porch, gallery, balcony or roof overhang) during a storm can cause significant damage to the main building. Depending on how the appendage was constructed and attached, the potential damage can vary. Typically, damage is caused by the wind pulling the appendage away from the main building or dislodging its components that then become airborne debris. In cases where the roof of an appendage is an extension of the main roof, such as at a roof overhang, side gallery shotgun or loggia, high winds entering an opening or soffit vent might lift the main roof off of the building. (The potential damage may be reduced if soffit vents are covered in preparation for a storm.)

One of the best ways to protect an appendage from storm damage is to create a continuous load path from the top of the structure down to the ground. This includes improving connections between all structural elements, such as rafters, lintels, posts or columns, foundations, piers and the sidewalk. For a wood structure, the installation of hurricane connectors, including ties, straps and bolts, are recommended at all locations where the appendage meets the main building including the roof, ceiling and floor. (Refer to *Structural Vulnerability*, page 13-4.) For a masonry building, proper maintenance typically involves repointing. (Refer to *Repointing Historic Masonry, Guidelines for Masonry and Stucco,* page 07-9.) **All connectors should be concealed from public view and not encased in new, non-historic trim.**

Another hurricane protection option is fabric storm panels that can protect an open balcony, galley or porch from flying debris in the event of a storm. Fasteners can be pre-installed in locations that are minimally visible and painted to match adjacent surfaces. Fabric storm panels, commonly used in Florida, are lightweight, easy to install and allow light to enter a building when used during a storm event. A benefit is that they have little to no impact on the historic character of a building if installed only during a storm threat. (Refer to *Window and Door Protection*, page 13-3.)

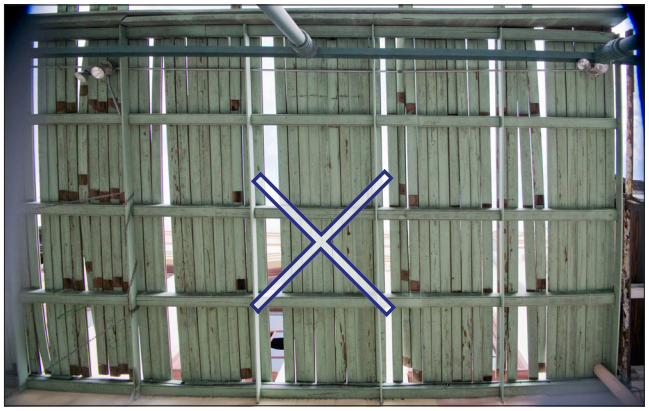

Several floor boards from this gallery are missing and loose. The remaining boards may fall onto pedestrians or become airborne in a high wind. Immediate repair is recommended.

A hurricane connector can be utilized at the attachment of posts to the structure of a gallery or a porch. They typically require longer fasteners, such as nails and screws, than traditional connectors. To minimize their visual appearance, the connector should be painted to match the color of the material to which it is attached and not in a contrasting color, as in this example.

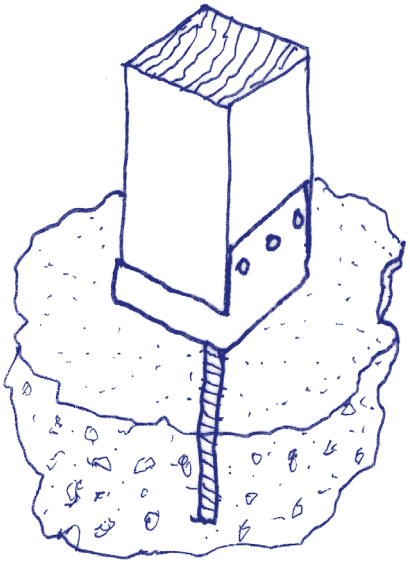

Columns and posts can be anchored to the ground to reduce potential damage from a high wind. Some anchors raise the base of the post or column slightly above the ground or sidewalk, which can reduce damage from rising or moving storm water.

Keep In Mind...

- Porches, galleries and balconies are structural elements that require maintenance by property owners to permit their safe use and passage by pedestrians below – Consultation with an architect or engineer can identify safety issues that should be addressed

Building elevations, particularly those exceeding 3'-0" in height, can dramatically alter a streetscape. They often necessitate significant modification to stairs and landings. The HDLC discourages building elevation that exceeds Base Flood Elevation plus 1'-0", or 3'-0", whichever is greater.

Building Elevation

Building elevation is raising a building to or above the Base Flood Elevation (BFE) to achieve the desired level of protection from flood waters. Unfortunately, building elevation may also compromise the historic integrity of a property to such an extent that it may no longer be considered historic either according to the criteria of the HDLC, or the National Register of Historic Places.

Elevation typically involves abandoning crawlspaces, raising the first floor level, and either constructing a new foundation or extending piers. Elevation of slab-on-grade buildings can include the original slab or abandoning it in place, with the construction of a new support system. Methods of lifting and supporting the building will vary from building to building, relying on the expertise of trained design professionals, although there are some common issues, outlined below, that must be addressed.

- **Feasibility**: Some buildings might be extremely difficult to elevate due to size, configuration, or construction type, such as row houses with common party walls, or whether or not they are in good enough condition to lift.
- **Appearance**: The greater the height of the elevation, the greater the exposed foundation, changing the appearance of the building and its relationship to its neighbors along the streetscape.
- **Foundation modification**: Although it might be possible to extend existing foundation walls or piers, they may not have sufficient strength or stability to be reused, this is also true of chimneys.
- **Access**: Elevation requires modification of building access including stairs, and could include the installation of an elevator. Consequently, it may be difficult to maintain entrance stair orientation for buildings located close to a front property line and to provide access for physically challenged individuals.
- **Building equipment and systems**: All equipment and systems previously located in the now abandoned crawl space will need to be relocated within the building interior, resulting in loss of habitable space. Exterior equipment should be located above the BFE/DFE and all connections will require extension and potentially weatherproofing. (Refer to *Elevating Building Systems and Equipment*, page 13-7)

Depending on the type of construction, elevation can be achieved by first lifting the building and then either extending the existing support system or constructing a new support system. The system will need to provide for both the vertical support of the building and for resistance to the lateral forces related to the increase in height, potential wind load, and storm surge. As a result, lateral reinforcing or stronger, non-traditional building materials may be required, such as foundations of filled concrete block or cast-in-place concrete.

Based on the original foundation or pier materials and architectural style, it may be possible to mimic the appearance of the original material with a stucco, brick or masonry as appropriate, which could visually reduce the impact of the higher foundation.

As part of elevating the building, the abandoned lower level must be addressed. This can include:

- Removal of abandoned equipment and hazardous materials from the crawlspace
- Modification of the area below the first floor to be wet floodproofed, providing flood openings to allow the free passage of water at foundations
- Re-grading the area below the foundation to promote drainage away from the building foundation

In addition to elevating the building, it may be desirable to also raise the grade around the building to maintain the relative height of the building above grade. On larger parcels, it may be possible to construct a berm that gradually extends up to the required height, while smaller parcels may require the installation of retaining walls to address the grade change. The significant runoff impact to adjacent parcels of raising all, or a part of, the grade should be considered.

Given the cost and disruption associated with elevating a building, many property owners seek to raise a building a full story, often well above the required BFE/DFE, to achieve "bonus" space for parking or storage. As individual properties are raised, this can have a significant impact on historic streetscapes, particularly in districts with consistent scale, form, massing, and fenestration patterns. To maintain the historic character of the City's streetscapes, the HDLC limits the potential height of elevations as indicated on the diagram above.

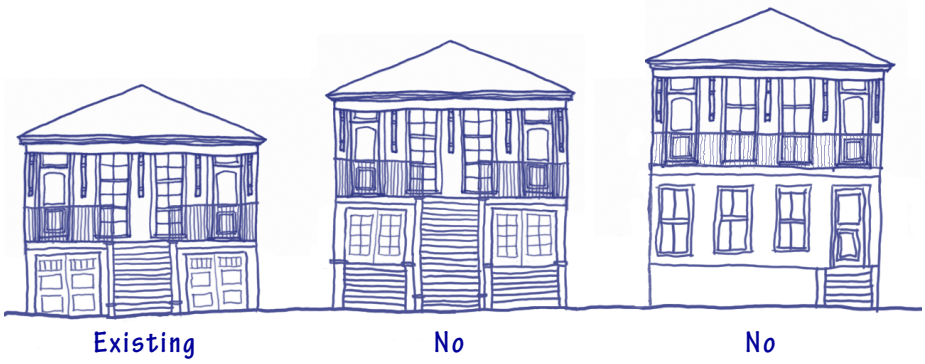

The HDLC does not approve the elevation of buildings that were constructed with raised basements, or later modified to include raised basements.

Elevation Considerations

- The relationship between the historic building and the ground plane is altered, as is the relationship to site features and possibly landscape elements such as trees, gardens and fencing
- The visual relationship between historic building and neighboring buildings on the site, or along the streetscape, is altered
- The HDLC encourages building elevation heights be limited to the Base Flood Elevation (BFE) plus 1'-0" or 3'-0", whichever is taller
- The HDLC discourages the elevation of buildings constructed with raised basements
- Elevation can significantly alter the basic proportions of a building from horizontal to vertical, which could be stylistically inappropriate, particularly for slab on grade construction, such as ranch houses
- The elevation of exterior building systems and equipment has the potential to increase their visibility making screening more challenging (refer to right)
- Elevation of wood-framed buildings requires a taller foundation or piers, increasing their visual prominence – Structural materials required to resist loads and forces may not be historically appropriate requiring sensitively-designed screening
- Elevation of masonry buildings, or elements such as chimneys, typically require the addition of masonry infill, which may be difficult to match to original materials
- Lower level features, such as chain walls and piers, will likely be removed as part of building elevation
- Stairs, porches or landings may require modification – Depending on the change in height and location of the building relative to the lot lines, the modification might necessitate the introduction of handrails and the relocation of the historic entrance
- Providing access for disabled persons is more challenging, impacting commercial and institutional buildings as well as some residences
- Overall level of alteration required for effective implementation might compromise historic integrity

Elevating Building Systems and Equipment

A potential costly effect of flooding can be damage to building systems and equipment. Traditionally, building systems and equipment are often located at the first floor, in a crawlspace or at exterior grade. This can include boilers, water heaters, electrical and internet service, air conditioning equipment, generators and appliances. Exposure to floodwater can significantly damage any of these systems, rendering them useless in the flood recovery process.

Two basic options to address building systems and equipment are protection in place or relocation to an area that will not be affected by floodwater. Some equipment can be protected in place by dry floodproofing the equipment, that is, constructing perimeter floodwalls with secondary drainage such as a sump pump to remove any water seepage.

Relocation will often require raising the systems and equipment to higher levels. This includes not only major equipment, but raising secondary elements such as electrical outlets and switches. Relocated equipment should be installed in a manner that meets both manufacturers' and City's code requirements including clearances, access and ventilation. At the interior of a building, the relocation of equipment to upper floors can result in the loss of habitable space. Relocation of exterior equipment may require mounting on roofs, walls and platforms as well as providing screening to minimize visibility from the public way. (Refer to *Equipment & Systems, Guidelines for Site Elements*, page 10-8.)

Elevating mechanical and electrical equipment above the Base Flood Elevation (BFE) is a basic improvement that may prevent the need for replacement in the event of a flood. It should also be considered in association with building elevations.

Storm Preparedness Protection Review

Install appropriate fasteners to allow quick installation of protection prior to a storm

S C N HDLC Staff review.

Install visually obtrusive hurricane protection or remove historic building fabric to accommodate storm protection

S C Commission review.

N HDLC Staff review.

Install visually unobtrusive structural modification

S C N HDLC Staff review.

Install visually obtrusive structural modification

S Commission review.

C N HDLC Staff review.

Elevate a building no more than BFE plus 1'-0" or 3'-0" above grade, whichever is greater

S Commission review.

C N HDLC Staff review.

Elevate a building more than BFE plus 1'-0" or 3'-0" above grade or elevate a building with a raised basement

S C N Commission appeal.

Elevate building systems and equipment in a manner that is visually unobtrusive from the public way

S C N HDLC Staff review.

Elevate building systems and equipment in a manner that is visually obtrusive from the public way

S C Commission review.

N HDLC Staff review.

Building Elevation Application Submission Requirements

In addition to existing conditions photographs, the following information is generally required for building elevation applications:

- **Site Plan:** Drawing that shows the building on a lot – *Provide dimensions from building to all property lines and note any changes in setbacks, paving and locations of ground-mounted equipment such as air conditioner units and generators*
- **Elevations:** Drawing that shows a façade of a building – *Provide existing and proposed drawings of all sides along with simplified drawings of adjacent buildings – Note alterations to elevations including stairs, railings, and wall-mounted systems ad equipment (supplemental details will likely be required)*
- **Floor Plans:** Drawing that shows the interior organization or layout of a building – *Note areas of exterior changes including porches and stairs*
- **Roof Plan:** Drawing that shows roof slopes, all roof-mounted equipment, projections, chimneys, dormers and skylights
- **Flood Elevation Certificate:** Document typically prepared by an engineer to document the elevation of a building relative to the Base Flood Elevation

Keep In Mind...

- Consultation with an architect or engineer is highly recommended prior to undertaking a connector installation project so that the installation is tailored to the specific needs of the building
- Not all contractors are familiar with the installation of hurricane protectors – Improper installation can be ineffective and hazardous in the event of a storm
- Maintain all window, door and shutter hardware in good working order to allow an opening to be easily secured – Verify locks, fasteners and tiebacks are well anchored into the wall or frame, install interior, long throw, slide bolts at the top and bottom of each double door leaf
- Hurricane resistant glazing, film, windows and doors may break in the event of a storm – They only potentially reduce interior damage during a storm
- Clips and fasteners can be installed on existing window trim to allow a pre-cut plywood panel, fabric storm panel or other hurricane protection to be installed quickly in the event of a storm
- Permanently installed track systems, panels, roll-up or accordion shutters are not historically appropriate
- There are continually new hurricane-prevention measures and products on the market– The level of protection, associated costs and impact on historic materials and building character should be considered

This material is based upon work assisted by a grant from the Department of the Interior, National Park Service. Any opinions, findings, and conclusions or recommendations expressed in this material are those of the authors and do not necessarily reflect the views of the Department of the Interior.
© 2019, City of New Orleans, Louisiana
Prepared by Dominique M. Hawkins, AIA, LEED AP of Preservation Design Partnership, LLC in Philadelphia, PA.